STANDARD EARTHQUAKE HOME RETROFIT (SEHR) OVERVIEW

1. Submittal Requirements:

- 2 copies of the Standard Earthquake Home Retrofit (SEHR) Plan Set, Sheets S1–S20
- 2 copies of any other plans you have drawn
- Completed building permit application

2. Review Process:

- Review by a building plans examiner
- Expedited approval process
- If home doesn't qualify to use SEHR Plan, plans examiner will advise
- Your home can still be retrofitted but additional engineering will be needed
- You will be called when the approved plans are ready to be issued

3. Inspection Process:

- Do not begin work until the permit has been issued
- Call inspector to verify anchor bolt installation
- Call inspector for a pony wall strengthening inspection
- You will need to be present at the inspection so the inspector can have access to the project.

TABLE OF CONTENTS

ITEM	SHEET
Permit Application Instructions	S1
Home Assessment Checklist	S2
Home Retrofit Plan Drawing Instructions	S3
Home Retrofit Plan Drawing	S4
General Structural Notes	S5–S7
Typical Wall Retrofit	S8
Sill Plate Anchor Details	S9–S10
Pony Wall Bearing Details	S11–S15
Floor Framing Connection Details	S16–S19
Concrete Foundation–Section Replacement	S20

PROJECT IMPACT
Earthquake Home Retrofit Program

THE HOME ASSESSMENT CHECKLIST

Complete this Checklist before application to determine the existing conditions in your home.

Detailed instructions for completing this checklist are included in the Home Retrofit Handbook.
Space is provided at the end of the checklist for you to enter comments related to questions answered "no" or "uncertain".

The plans examiner will determine if your proposal meets the requirements to use the SEHR Plan based on your answers.

Qualification Requirements (Existing Conditions)

All "Yes" or "NA" (not applicable) answers mean your home is qualified to use the Standard Earthquake Home Retrofit (SEHR) Plan. You may need to hire an engineer or architect to develop the appropriate retrofit method if "no" or "uncertain" is checked.

Home Characteristics	Yes or NA	No	Uncertain
1. Is the home of light, wood-frame residential construction?			
2. Does the home have four or fewer dwelling units?			
3. Is a sill plate present?			
4. Is the home built on a flat or moderate slope of less than 30 percent (approximately 18 degrees from horizontal)?			
5. Is the foundation wall around the perimeter of the home continuous except for allowable exclusions?			
6. Is the foundation of concrete or reinforced masonry that is in good condition?			
7. Are the pony walls 4 feet or less in height?			
8. Is the home three stories or less, counting pony walls over 18 1/2 inches as one story?			
Additional Home Information	**Yes**	**No**	**Uncertain**
9. What is the overall height of the pony wall? (Specify dimension.)			
10. How many floors are above the pony wall (or above the foundation)? (Specify # of floors.)			
11. Is the roof made of standard lightweight roofing materials, such as wood or composition shingle?			

Identify Retrofit Needs for Home

All "Yes" answers indicate no retrofit work is needed. "No" or "Uncertain" answers indicate retrofit and/or repair work is needed to improve the resistance of the home to earthquake shaking.

Anchoring the Sill Plate	Yes	No	Uncertain
12. Are sill plates in good condition?			
13. Are sill plates anchored (bolted) to the foundation?			
14. Are sill plate anchor bolts spaced 4 to 6 feet apart, placed near the center of the concrete foundation wall (about 2 1/2 inches from the side of a 6 inch foundation wall), and in good condition?			
15. Are sill plate anchor bolts at least 1/2 inch in diameter for one to two story buildings and 5/8 inch for a three-story building?			
16. Are sill plate anchor bolts located not more than 12 inches from the ends of each piece of sill plate that is more than 30 inches in length?			
Connecting the Floor Framing	**Yes**	**No**	**Uncertain**
17. Do floor joists have either continuous rim joists or joist blocking present at bearing points?			
18. Is the floor framing system connected to the underlying sill plate with metal framing clips or are 8d nails placed 6 inches on center?			
19. Is the floor framing system connected to the underlying pony wall top plate with metal framing clips or are 8d nails placed 6 inches on center?			
Strengthening the Pony Wall (Answer NA if no pony walls)	**Yes or NA**	**No**	**Uncertain**
20. Are pony wall double top plates present and in good condition?			
21. Do structural panels (also called sheathing) cover the stud walls on either the inside or the outside of the pony wall?			
22. Does existing pony wall sheathing in a crawl space have sufficient stud cavity ventilation to prevent the growth of fungus within the wall?			
23. Are the nails around the perimeter of the structural paneling spaced 3 to 6 inches apart?			
24. Are the nails along the studs in panel fields (non panel edge conditions) spaced 6 to 14 inches apart?			
25. Are there screened crawl space ventilation openings through structural panels? (1sf of openings per 150sf of crawl space floor area)			

Comments about "No" or "Uncertain" answers:

Name and daytime phone number of person who completed the Home Assessment Checklist (PLEASE PRINT)

For Office Use Only:

- ☐ Home qualifies to use the Standard Earthquake Home Retrofit Plan
- ☐ Home does not qualify to use the Standard Earthquake Home Retrofit Plan
- ☐ Home earthquake retrofit not needed
- ☐ Damaged or missing structural elements must be repaired or installed before completing the retrofit

JANUARY 2008

Standard Earthquake Home Retrofit Plan Set

EARTHQUAKE DAMAGE REDUCTION IN EXISTING WOOD FRAME RESIDENTIAL BUILDINGS WITH WEAK PONY WALLS AND UNBOLTED SILL PLATES

Applicant Plan Sheet

BUILDING A DISASTER RESISTANT COMMUNITY · PROJECT IMPACT SEATTLE

Sheet
S2

SECTION II
EARTHQUAKE RETROFIT PLAN DRAWING–INSTRUCTIONS

1. Help.
   Refer to the Home Retrofit Handbook for detailed instructions on how to prepare your plan.

2. Measure and Mark Existing Conditions.
   Draw an outline of the building's foundation in the space provided (Section IIb). Mark the scale used. Show chimneys, crawlspace access, and any other gaps in the foundation wall. Note the height of all pony walls. Mark the direction of run (orientation) of floor joists on your foundation outline. For completeness show on outline of porches, garages, or additions that lack a foundation using a dashed line. Refer to the "SAMPLE PLAN" (Section IIa) for guidance.

3. Select and Mark Plan Detail Numbers.
   For each wall segment on your Earthquake Retrofit Plan Drawing, mark on the foundation outline the number of the plan detail(s) that you will use to complete your retrofit project. Sheets S8 through S18 include details for common building conditions that meet the minimum prescriptive requirements.

4. Determine and Mark Wall Bracing Layout.
   Use the Summary of Minimum Prescriptive Requirements (Table 1 on Sheet S7) to determine the amount and placement of pony wall bracing. Show on the foundation outline the layout of the structural panels you will use to brace the pony walls.

5. You have now completed your Earthquake Retrofit Plan Drawing.

Note: Outline of foundation to be shown with double parallel lines as shown.

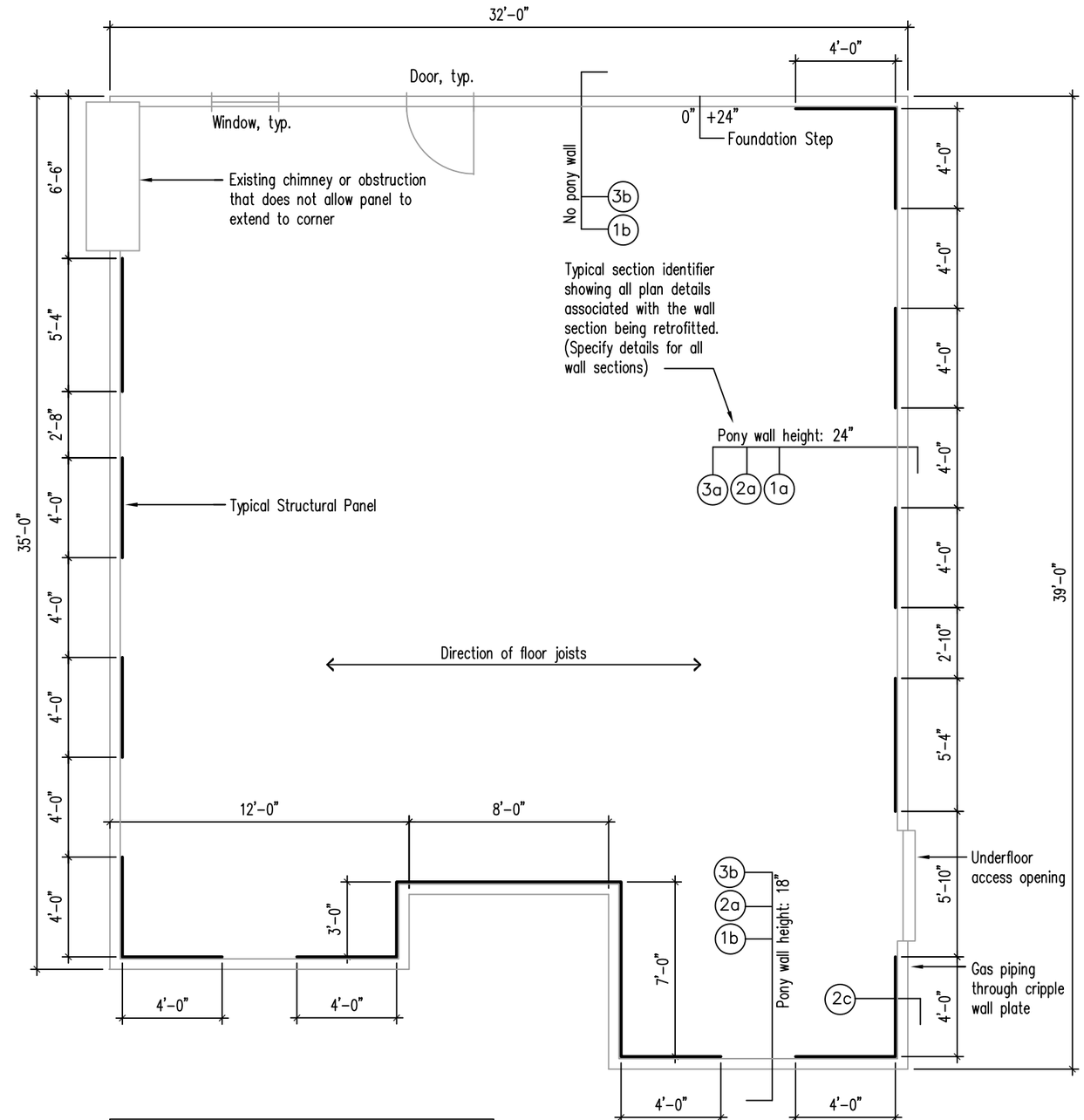

NOTE: BRACING SHOWN IS FOR A ONE-STORY HOUSE WITH A PONY WALL THAT VARIES IN HEIGHT.

SECTION IIa – SAMPLE PLAN (not to scale)

JANUARY 2008

Standard Earthquake Home Retrofit Plan Set

EARTHQUAKE DAMAGE REDUCTION IN EXISTING WOOD FRAME RESIDENTIAL BUILDINGS WITH WEAK PONY WALLS AND UNBOLTED SILL PLATES

Plan Details Reference Sheet

BUILDING A DISASTER RESISTANT COMMUNITY. PROJECT IMPACT SEATTLE

Sheet
S3
3 of 20

JANUARY 2008

Standard Earthquake Home Retrofit Plan Set

EARTHQUAKE DAMAGE REDUCTION IN EXISTING
WOOD FRAME RESIDENTIAL BUILDINGS WITH WEAK
PONY WALLS AND UNBOLTED SILL PLATES

Applicant Plan Set

PROJECT IMPACT SEATTLE
BUILDING A DISASTER RESISTANT COMMUNITY

Sheet

S4

SECTION IIb – EARTHQUAKE RETROFIT PLAN DRAWING

CHECK SCALE USED: ☐ ONE SQUARE = ONE FOOT
☐ ONE SQUARE = TWO FEET

SECTION III – GENERAL NOTES

A. PURPOSE

The intent of the Standard Earthquake Home Retrofit (SEHR) Plan is to promote public safety and welfare by reducing the risk of earthquake-induced damage in existing wood frame residential buildings. The requirements in this plan define a minimum recommended standard for the retrofit of these existing buildings. Damage to homes in past earthquakes show that incorrect or incomplete retrofits are as bad as having no retrofit at all. Use of this standard plan is intended to improve building performance during earthquake shaking, but will not necessarily eliminate earthquake damage. The primary purpose is to reduce the likelihood that these buildings will fall off their foundations.

B. SCOPE

The standard plan applies to one, two and three story light wood-frame residential buildings with raised wood floors meeting the following criteria as determined by the completion of the Home Assessment Checklist:

1. The maximum number of dwelling units and/or guest rooms is four.
2. No portion of the building is constructed over a slope steeper than 3 horizontal to 1 vertical.
3. The building is supported at its perimeter by a continuous concrete or reinforced masonry footing and stem wall in good condition.
4. The pony wall heights do not exceed 48 inches in one or two story buildings and do not exceed 18-1/2 inches height in three story buildings.
5. The pony walls are not sheathed with sufficient wood structural panels or diagonal sheathing.

C. GENERAL REQUIREMENTS

Permit requirements: All work shown on these plans requires a building permit.
Inspection requirements: All work is subject to inspection by the local building inspector. In general, this will involve two inspections, anchor bolt and panel installation. A final sign off by inspectors is required when the work is complete. If new concrete foundations are involved, an additional inspection will be required after all forming and placement of reinforcing, but before concrete pouring. In addition, if the contractor wishes to discuss construction specifics with the inspector, a separate inspection may be necessary.

D. DEFINITIONS

Anchor side plate is a metal plate or plates used to connect the sill plate or floor framing to the side of a concrete stem wall when conditions prevent chemical anchor or expansion bolt installation vertically through the sill plate.

Approval is current product acceptance under an ICC (International Code Council) evaluation report or equivalent.

Chemical anchor is a fastener placed in hardened concrete that derives its holding strength from a chemical adhesive compound placed between the wall of the hole and the embedded portion of the anchor. Chemical anchor compounds are organic compounds comprised of resin and hardener, that form adhesives when blended together. Examples of chemical adhesive compounds include epoxies, polyurethane, polyesters, methyl methacrylate and vinyl esters.

Embedment depth is the depth of the anchor into the concrete

Expansion bolt is a mechanical fastener placed in hardened concrete designed to expand in a pre-drilled hole of a specified size and engage the sides of the hole in one or more locations to develop shear and/or tension resistance to applied loads without grout, adhesive or drypack.

Holdown: Hardware used to resist overturning and tension forces. Installed in pairs at the opposite ends of structural panel framing, holdowns connect the stud framing to the concrete foundation. Holdowns require chemical anchoring and are not a replacement for typical foundation anchor bolts. The capacity to resist tension/uplift force per holdown must meet or exceed 3,000 lbs. Refer to manufacturer for additional requirements and installation recommendations.

Installation torque is the minimum moment applied to a torque-set anchor that creates the degree of anchorage required for full load values.

Mechanical Anchor: A fastener placed in hardened concrete that derives its holding strength by a mechanical interface between the anchor and the walls of the concrete hole without grout, adhesive, or drypack. Examples of mechanical anchors include expansion bolts and screw anchors.

Minimum concrete edge distance is the measure between the free edge of the concrete and the centerline of the bolt at which the concrete will not break away when the anchor is set or loaded in service. For minimum edge distances for anchors refer to manufacturer.

Oriented strand board (OSB) is a mat-formed wood structural panel composed of thin rectangular wood strands or wafers arranged in oriented layers and bonded with waterproof adhesive.

Pony wall is a wood-framed stud wall extending from the top of the foundation to the underside of the lowest floor framing. Also called a cripple wall or a knee wall.

Screw Anchor: A mechanical fastener with hardened self-undercutting, threaded teeth, designed to screw into a pre-drilled hole of a specific size in hardened concrete, achieving shear and/or tension resistance by a threaded interlock between its teeth and the concrete hole without grout, adhesive, or drypack..

Snug tight is the condition when the full surface of the plate washer is in contact with the wood member and begins to slightly indent the wood surface.

Structural panel in the standard plan refers to a product composed primarily of wood and meeting the requirements of the applicable standard PS1 & PS2 per IBC Section 2306.1, including all-veneer plywood and OSB.

Torque-set anchor is an expansion bolt whose wedge or sleeve engages the concrete base material in the drilled hole by the application of torque and where the amount of torque applied controls the degree of anchorage.

E. MATERIALS

Adhesive packaging: The packaging for each adhesive shall be marked with the manufacturer's name and address, lot number of date or packaging, shelf life or expiration date, name of the quality control agency, and instructions for installation. No adhesive shall be used after its expiration date.

Anchors, including chemical and mechanical: all adhesive or mechanical anchors shall have a minimum normal load capacity of 635 lbs. for 1/2 inch bolts and 980 lbs. for 5/8 inch bolts in 2000 psi concrete at the installed edge distance and depth of embedment. All proprietary anchors shall have current ICC or equivalent approval.

Anchor side plate: All anchor side plates shall be galvanized when exposed to weather. The minimum seismic adjusted load capacity for shear in the direction of the sill plate must meet or exceed a capacity of 1260 lbs when substituted for 5/8 inch bolts and 840 lbs when substituted for 1/2 inch bolts. Other products with lower approved capacities may be used if their required spacing is reduced proportionately by the ratio of their strength to the strength requirement above. For example, (400 lbs/840 lbs) x 72 in. o.c. = 34 in. o.c. instead of 72 in. o.c. for one-story using an anchor side plate with allowable values of 400 lbs instead of 840 lbs or greater. Anchor side plates shall be attached to the concrete stem wall with a minimum of two 1/2 inch approved anchors. The number of mechanical or adhesive anchors used must have a total shear capacity in concrete equal or greater to the value for the foundation anchor requirement above.

Chemical anchor rod materials: All chemical anchors shall use all-thread rod manufactured from ASTM A36 or SAE 1018 material to meet the mechanical requirements of ASTM A307. All thread rods shall be free of oil, scale and rust. The use of smooth or partially threaded rods or bolts is prohibited.

Concrete: All new concrete for replacement footings shall be of 2500 psi minimum compressive strength. No special inspection is required.

Framing clips: All framing clips shall be of minimum 18 gauge galvanized steel and approved under ICC or equivalent for wood frame construction. The seismic load capacity in the long direction must meet or exceed 450 lbs. in dry lumber. The fasteners must be (12) 8d common x 1-1/2 inch nails unless otherwise approved. #6 x 1-1/2 inch flat head wood screws may be used at existing rim joist, blocking or top plate connections.

Lumber: All new lumber installed for joist blocking shall be a minimum of nominal two inch Hemfir #2 or better as graded under Western Wood Products Grading Rules. All lumber in contact with concrete shall be pressure treated hem fir for new stem walls and for sill plate replacements over 10% of the wall length. Replacement of sill plate less than 10% of the wall length may use the same lumber species as the existing materials. All existing lumber shall be free of defects including dry rot, mildew, excessive wane, warping and insect infestation or damage. Damaged lumber must be replaced and the source of water or insect intrusion removed.

SECTION III – GENERAL NOTES (continued)

Plate washers: 3/16 x 2 x 2 square plate washers are required (per IEBC 2006 Table A3-A). Standard circular cut washers shall not be used to connect sill plates to concrete stem walls. Washers furnished with the proprietary anchors shall not be used. Beveled washers shall be used on anchors drilled at an angle exceeding 6 degrees from vertical and shall be placed over the plate washers.

Reinforcing bar: ASTM A615 Grade 40 or 60

Structural panels (Sheathing): All plywood shall be graded under United States Voluntary Product Standard & shall meet IBC 2306.1. All structural panel sheathing used for wall bracing shall be nominal 1/2 inch (eg. 15/32 inch plywood, 7/16 inch OSB) APA Rated Sheathing, or CDX. Sheathing of 4–ply or better is required. 7/16 inch Oriented Strand Board (OSB) is acceptable provided studs are spaced a maximum of 16 inch o.c. or panels are installed with the long dimension across studs.

Structural panel fasteners: Nails shall be 8d common (.131 inch x 2–1/2 inch) with full heads (.281 inch).

F. REPLACEMENT OF EXISTING FOOTINGS & STEM WALLS

1. Deteriorated, cracked or unreinforced masonry footings may be replaced as shown on this plan provided proper shoring is provided. The method of shoring and sequence of its construction shall be the responsibility of the person performing the work and shall not weaken the structure so as to be a threat to the safety of its occupants or passers nearby.
2. When existing footings and stem walls are replaced in sections, the person performing the work shall take care to insure that all reinforcing steel shall be lapped a minimum of 24 inches and shall be doweled into the existing concrete with adhesive or drypack a minimum of 8 inches.
3. The repair of damaged footings or stem walls or the continued use of archaic building materials such as unreinforced masonry, requires that plans and calculations be prepared by a licensed architect or engineer.
4. All load bearing concrete foundations shall have a minimum of 1– #4 horizontal rebars within the top 6" of the wall, maintain a minimum of 1" separation between rebars, and maintain a minimum 3/4" of continuous cement cover.

G. ANCHOR BOLT INSTALLATION

1. General Requirements
   (a) Condition of existing concrete: All concrete shall be fully cured and hardened, not structurally weakened by cracking and in sound condition. Concrete with excessive cracking, deterioration or damage shall be replaced.
   (b) Condition of existing anchor bolts: Existing sill plate anchor bolts cast in concrete and in sound condition shall be permitted to provide all or a portion of the sill plate connection required if the anchor bolt diameter and spacing meet or exceed the requirements in the Summary of Minimum Prescriptive Requirements and the sill plate is connected to a snug tight condition under the torque test requirement.
   (c) Drilling of the hole in concrete: The drilled hole diameter and minimums for spacing, depth of hole and edge distance must comply with an ICC Evaluation Report or equivalent approval and manufacturer's recommendations. All holes shall be drilled with carbide–tipped drill bits conforming to ANSI Specification B94–12–77 tolerances (1/2 = 0.520–0.530, 5/8 = 0.650–0.660 inches). Worn drill bits with reduced diameters below the ANSI tolerance limits shall not be used. All holes shall be driven as perpendicular as possible to the concrete surface.
   (d) Choosing between mechanical or chemical anchors: Mechanical or chemical anchors may be used interchangeably in concrete of average or better quality. Concrete of weaker quality may be indicated by spalling durin ɟ drilling or setting of expansion bolts or failure of anchors to reach the minimum torque required. Chemical anchors must be used in weaker quality concrete. This requirement does not waive the need to replace existing concrete foundations when damaged, deteriorated, or of unsuitable quality.
2. Requirements for Installing Chemical Anchors.
   (a) Cleaning of the hole: The hole must be cleaned with a vacuum attachment, hole brush, and/or compressed air. No debris or dust shall remain in the hole.
   (b) Placement of the adhesive: The resin, filler and hardener shall be thoroughly mixed before placement in the hole unless approved to be mixed in the hole. Compounds dispensed through a static mixing nozzle must be of uniform color. Ensure uniform color by extruding a small amount of adhesive until color uniformity is achieved. Adhesive added to the hole shall be applied at a slow enough rate to prevent the formation of air voids. Adhesives must be installed within the manufacturer's recommended temperature range for the air and concrete.
   (c) Placement of the threaded rod: The all thread rod, completely free of rust, scale or oil, shall be installed to the full depth of the hole. The rod shall be turned counter–clockwise sufficiently during installation for the adhesive to engage the threads. The length of the rod shall extend a minimum of one rod diameter above the nut after tightening.
   (d) Adhesive setting time: No torquing of the anchors shall occur until the adhesive has cured for the recommended time based on the temperature as shown in the manufacturer's instructions. Care must be used to insure that the anchor bond is not disturbed until the adhesive has sufficiently cured.
   (e) Torque requirements: A minimum torque setting of 30 ft lbs. for 1/2 inch anchors and 40 ft lbs. for 5/8 inch anchors is required for all chemical anchors for the snug tight condition unless this value exceeds the maximum torque allowed by the manufacturer specifications. In those cases, the torque shall be set to its maximum allowable value.
3. Requirements for Installing Mechanical Anchors
   (a) Drilling of the hole: Care must be used to insure that the drilled hole carefully matches the depth and diameter requirements for the bolt type. The depth of the hole cannot exceed 2/3 of the concrete thickness in the direction of the drilled hole. This is critical at the application of anchor side plates to full height concrete stem walls.
   (b) Cleaning of the hole: Follow manufacturer's recommendations, The depth required for embedment must be free of debris. This rule does not apply to drop–in anchors that rely on the bottom of a clean drilled hole to set the expansion element.
   (c) Torque requirements: A minimum torque setting equal to the installation torque or 30 ft lbs. for 1/2 inch bolts and 40 ft lbs. for 5/8 inch bolts, which ever is greater, is required for all expansion bolts unless this value exceeds the maximum torque allowed by the manufacturer specifications. In those cases, the torque shall be set to its maximum allowable value.

H. ANCHOR SIDE PLATE INSTALLTION

1. Anchor side plates may be substituted for vertically placed chemical or mechanical anchors only when conditions prevent anchor or bolt installation vertically through the sill plate. This condition commonly occurs when there is no pony wall or one of greatly reduced height.
2. A minimum of two anchor side plates must be installed on each piece of sill plate 32 inches or longer. The nearest edge of the plate shall be installed a minimum of 9 inches but not more than 12 inches from the end of the sill plate.
3. Installation of the anchor bolts in the existing concrete shall follow the information in Section G except as noted herein. Care shall be used to insure the drilled hole depth does not exceed 2/3rds of the stem wall thickness. Cleaning of the hole is required.
4. Lag screws and wood screws used to attach anchor side plates shall be installed as follows:
   (a) The lag or wood screw shall be located at the center of the plate thickness and shall penetrate the sill plate a minimum of 2–1/2 inches.
   (b) Lead holes shall be pre–drilled for the threaded portion of the screw as follows:
   lag screw. The pre–drill diameter for the lead hole shall not exceed 70% of the shank diameter and shall be drilled to the full depth of penetration of the lag screw. Use a 1/4 inch diameter drill bit for 3/8 inch lag screws and 1/8 inch drill bit for 1/4 inch lag screws.
   (c) Clearance holes shall also be drilled for the solid portion of the shank as follows:
   lag screw. The clearance hole shall be equal in depth and diameter to the solid portion of the shank.
   (d) The threaded portion of the lag or wood screw shall be inserted in its lead hole by turning with a wrench and not by driving with a hammer or other blunt object.
   (e) Soap or other lubricant shall be used on the lag or wood screws or in the lead holes for ease of installation and to prevent damage to the lag screw.
5. Wood shims may be required to fill the space between the inside edge of the sill plate and the edge of the concrete stem wall. See manufacturer's instructions.

i. PONY WALL BRACING, VENTILATION & FRAMING CLIP INSTALLATION

1. The length of the stuctural panels along the foundation shall be at least 48 inches or two times the height of the wall, whichever is greater. Bracing is required at all exterior walls. Structural panels installed on individual pony wall sections shall be nearly equal in length and nearly equally spaced along the wall. Nails shall be 8d common with a minimum shank diameter of .131 inches.
2. Framing members or blocking shall be provided at the edge of all wood structural panels.

Standard Earthquake Home Retrofit Plan Set

EARTHQUAKE DAMAGE REDUCTION IN EXISTING WOOD FRAME RESIDENTIAL BUILDINGS WITH WEAK PONY WALLS AND UNBOLTED SILL PLATES

Applicant Plan Set

BUILDING A DISASTER RESISTANT COMMUNITY. PROJECT IMPACT SEATTLE

Sheet

S6

SECTION III – GENERAL NOTES (continued)

i. PONY WALL BRACING, VENTILATION & FRAMING CLIP INSTALLATION (CONTINUED)

3. Panel joints shall occur on the joint of double studs when these studs are nailed with 16d sinker nails at 4 in. o.c.
4. Panel joints shall maintain a 1/8 inch separation between panels for expansion.
5. Panels may be oriented horizontally or vertically.
6. Nails shall be driven flush but shall not fracture the surface of the structural panel sheathing, both edge and field nailing. When a nail fractures the sheathing it shall be left in place and not counted as part of the required nailing. A new nail shall be driven flush to the surface within 2 inches of the discounted nail.
7. Existing crawl space ventilation must be maintained and not covered by the structural panels used to brace the pony wall.
8. Where obstructions such as crawl space ventilation openings or mechanical utilities cannot be avoided in the panel length, the required panel length shall be increased by the length of the obstruction or a minimum of one stud spacing, whichever is greater.
9. Framing clips shall connect the top plate to a rim joist or to joist blocking, or, in the case without a pony wall, shall connect the sill plate to a rim joist or to joist blocking. They shall be installed with their long dimension horizontal and with all of the nail holes filled with approved nails or wood screws.

Table 1: Summary of Minimum Prescriptive Requirements For Anchoring Frame to Foundation System ①③

STORIES ABOVE FOUNDATION WALL (B)	ANCHOR SIZE AND SPACING (E, G, H)	SHORT SILL PLATES (E, G, H)			PONY WALL BRACING (i)		FRAMING CLIPS	JOIST BLOCKING (E, i)
		6 ft. to < 12 ft.	30 in. to < 6 ft.	< 30 in.	HEAVY TILE ROOF or STUCCO WALLS ④⑤	AVERAGE CONDITIONS ⑤		
ONE	1/2 inch at 6 ft. on center maximum	3 anchors	2 anchors	1 anchor near center	Total bracing not less than 50% of wall length. Install part of bracing at each end of wall section and remainder equally spaced in between ends.	Total bracing not less than 40% of wall length. Install part of bracing at each end of wall section and remainder equally spaced in between ends.	32 in. on center maximum	At alternate joist spaces ②
TWO	1/2 inch at 4 ft. on center maximum or 5/8 inch at 6 ft. on center maximum	4 anchors for 1/2 in. bolts; 3 anchors for 5/8 in. bolts	2 anchors	1 anchor near center	Total bracing not less than 70% of wall length. Install part of bracing at each end of wall section and remainder equally spaced in between ends.	Total bracing not less than 50% of wall length. Install part of bracing at each end of wall section and remainder equally spaced in between ends.	24 in. on center maximum	At every joist space above braced Pony walls, at alternate joist spaces at other locations ②
THREE	5/8 inch at 4 ft. on center maximum or 1/2 inch at 2'–8" on center maximum	4 anchors	2 anchors	1 anchor near center	Install bracing over 100% of the wall length.	Install bracing over 80% of the wall length. Install part of bracing at each end of wall section and remainder equally spaced in between ends.	16 in. on center maximum	At all joist spaces ②

① Letter refers to Section of General Notes, typical.

② If blocking is used between joists in place of continuous Rim Joist, one framing connection must be installed at each block.

③ Based on 2006 IEBC Tables A3–A, A3–B, and Figure A3–10.

④ Exterior walls with portland cement plaster and roofing using clay and concrete tile weighing more than 6psf.

⑤ See Approved Alternate Details for pony wall bracing not meeting the 2:1 aspect ratio.

JANUARY 2008

Standard Earthquake Home Retrofit Plan Set

EARTHQUAKE DAMAGE REDUCTION IN EXISTING WOOD FRAME RESIDENTIAL BUILDINGS WITH WEAK PONY WALLS AND UNBOLTED SILL PLATES

Applicant Plan Set

BUILDING A DISASTER RESISTANT COMMUNITY. PROJECT IMPACT SEATTLE

Sheet

S7

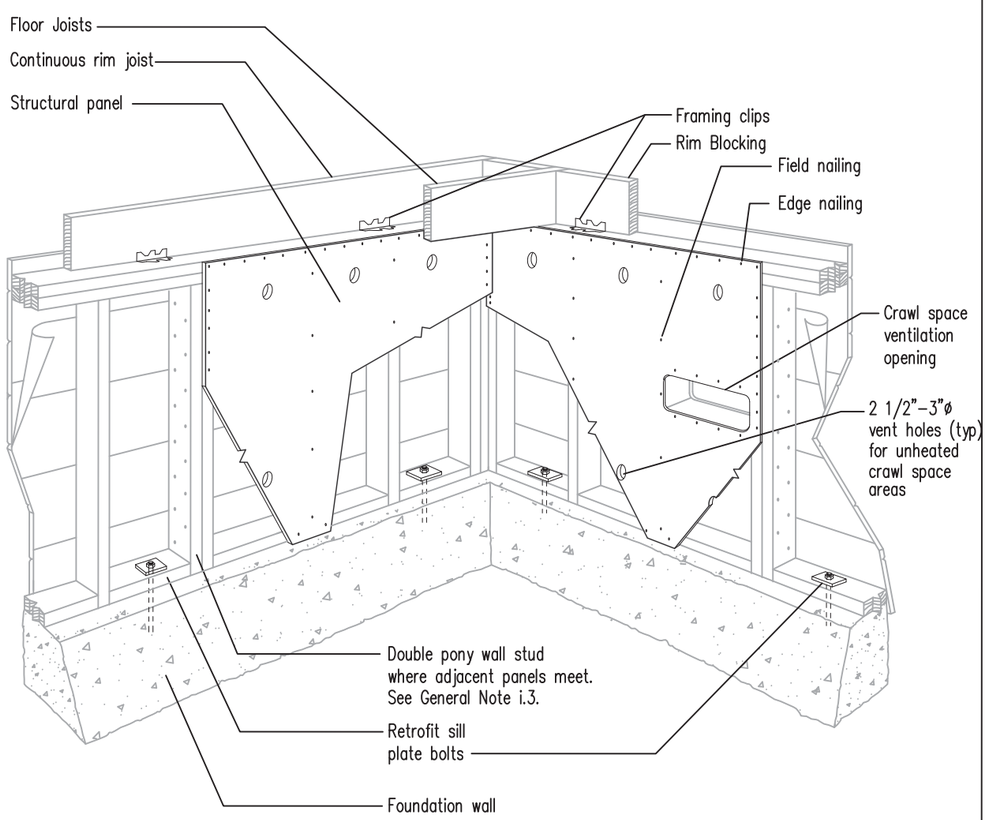

Notes:

1. This sketch shows a sample wall section that has undergone a typical seismic strengthening retrofit.
2. This is a general sketch and is not intended to supersede requirements contained in the Standard Earthquake Home Retrofit Plan or in the specific installation details.
3. Ventilation required by Code in unheated crawl space situations.

FRONT VIEW (isometric)

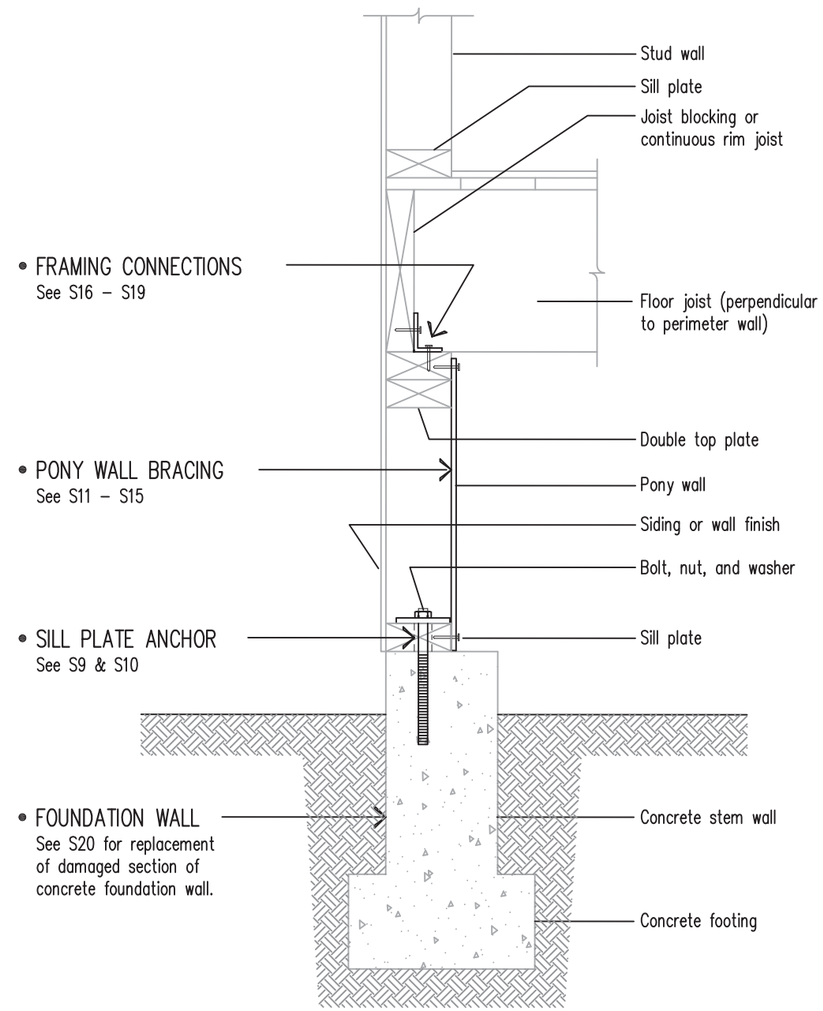

SIDE VIEW

TYPICAL WALL RETROFIT

JANUARY 2008

Standard Earthquake Home Retrofit Plan Set

EARTHQUAKE DAMAGE REDUCTION IN EXISTING WOOD FRAME RESIDENTIAL BUILDINGS WITH WEAK PONY WALLS AND UNBOLTED SILL PLATES

Applicant Plan Set

BUILDING A DISASTER RESISTANT COMMUNITY · PROJECT IMPACT SEATTLE

Sheet

S8

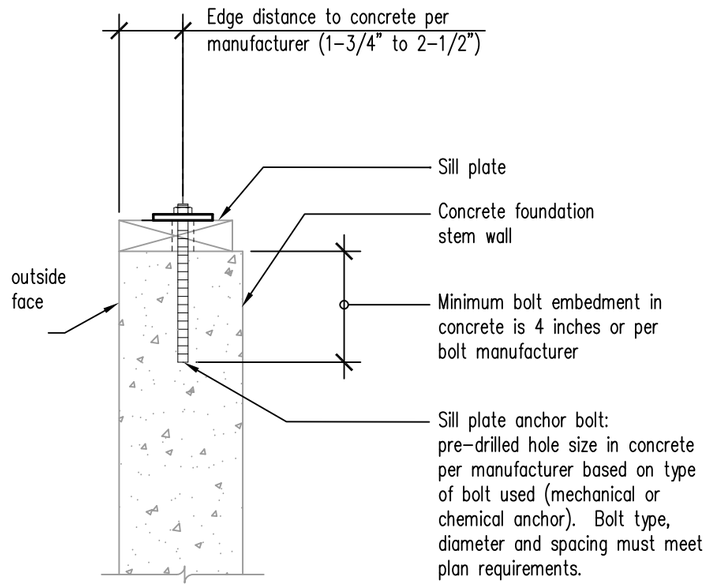

SECTION

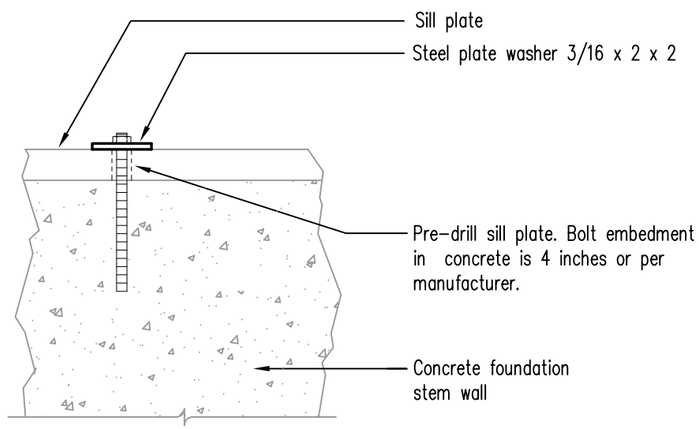

FRONT VIEW

1a VERTICAL ANCHOR DETAIL (sill plate width = pony wall width)

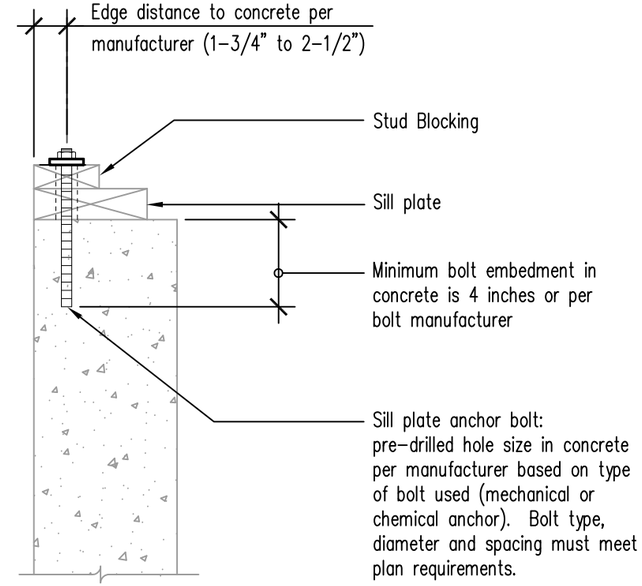

SECTION

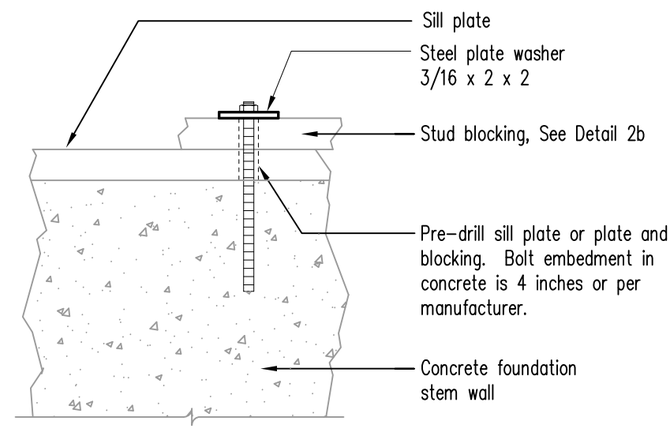

FRONT VIEW

1b VERTICAL ANCHOR DETAIL (sill plate wider than pony wall)

1 SILL PLATE ANCHOR DETAILS

- See Section III – General Notes (Sheets S5–S7) for materials, installation, and spacing requirements.
- Expansion bolts shall not be used when installation causes surface cracking of the foundation wall at the location of the bolt.

JANUARY 2008

Standard Earthquake Home Retrofit Plan Set

EARTHQUAKE DAMAGE REDUCTION IN EXISTING WOOD FRAME RESIDENTIAL BUILDINGS WITH WEAK PONY WALLS AND UNBOLTED SILL PLATES

Plan Details Reference Sheet

BUILDING A DISASTER RESISTANT COMMUNITY · PROJECT IMPACT SEATTLE

Sheet

S9

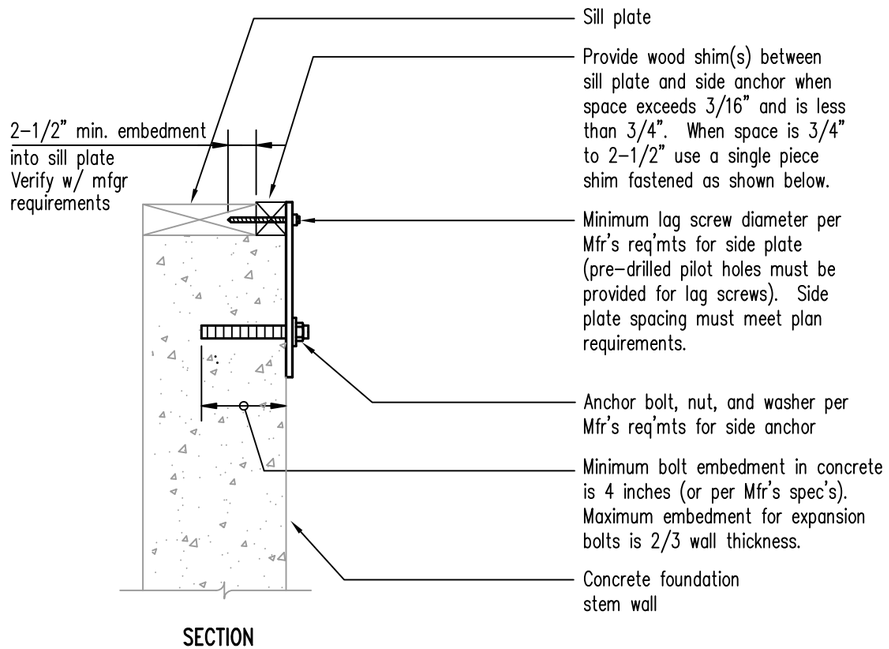

SECTION

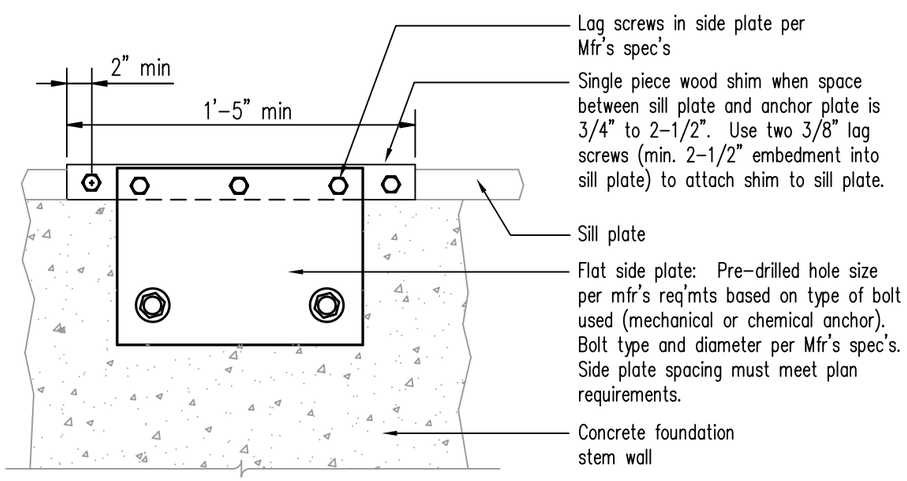

FRONT VIEW

1c SIDE ANCHOR DETAIL – Flat Side Plate
No pony wall

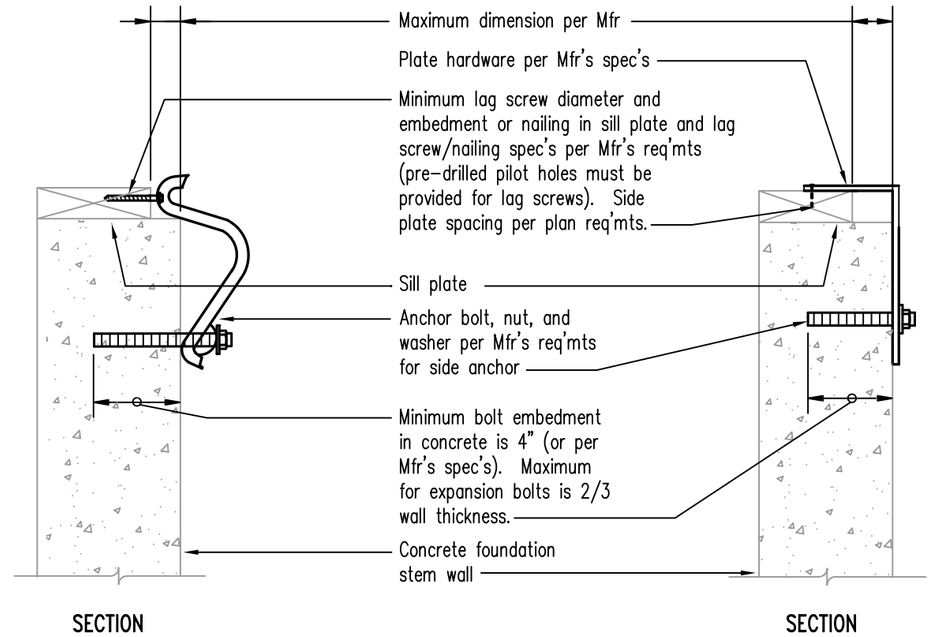

SECTION SECTION

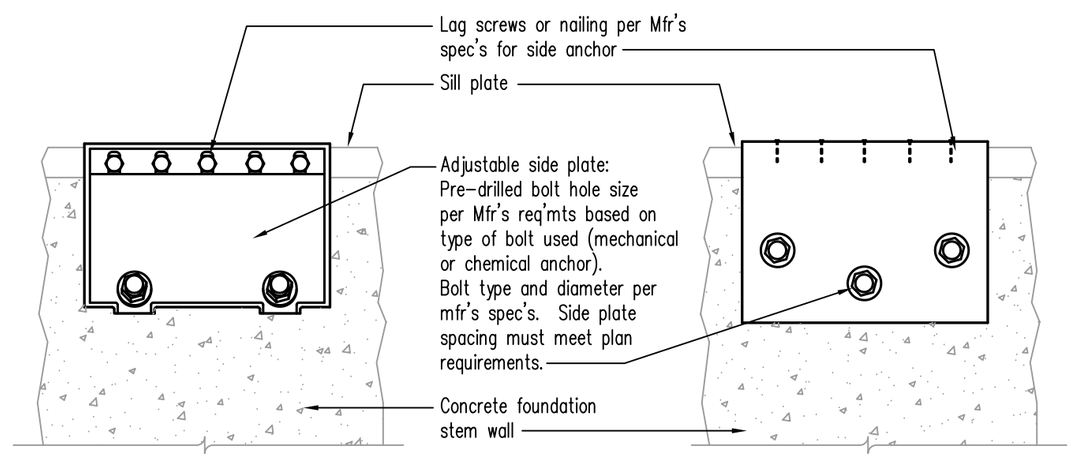

FRONT VIEW FRONT VIEW

1d SIDE ANCHOR DETAIL – Adjustable Side Plates
No pony wall

1 SILL PLATE ANCHOR DETAILS (CONT'D.)

JANUARY 2008

Standard Earthquake Home Retrofit Plan Set

EARTHQUAKE DAMAGE REDUCTION IN EXISTING WOOD FRAME RESIDENTIAL BUILDINGS WITH WEAK PONY WALLS AND UNBOLTED SILL PLATES

Plan Details Reference Sheet

BUILDING A DISASTER RESISTANT COMMUNITY · PROJECT IMPACT SEATTLE

Sheet
S10
10 of 20

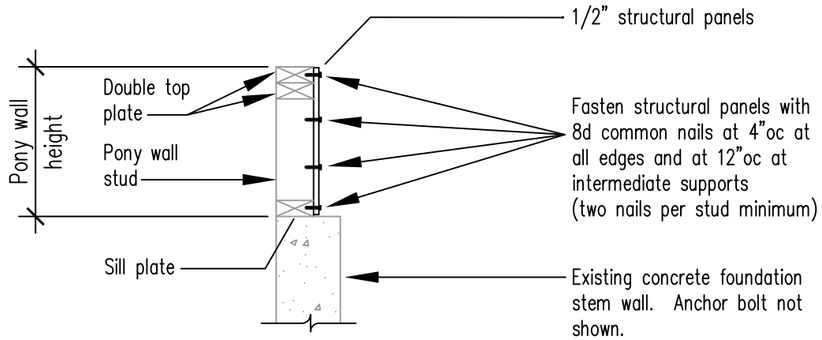

SECTION

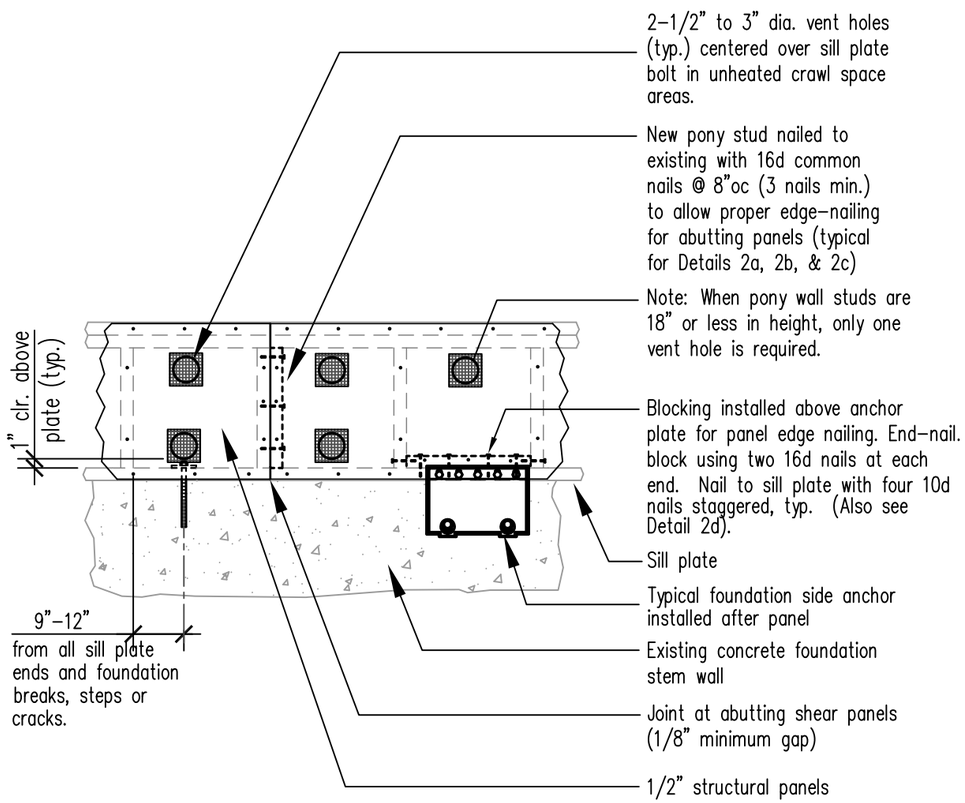

FRONT VIEW

2a SILL PLATE SAME WIDTH AS PONY WALL

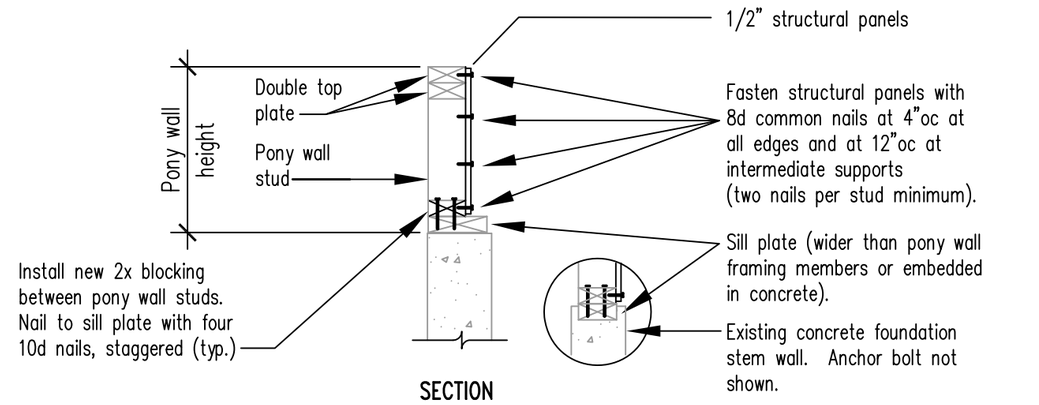

SECTION

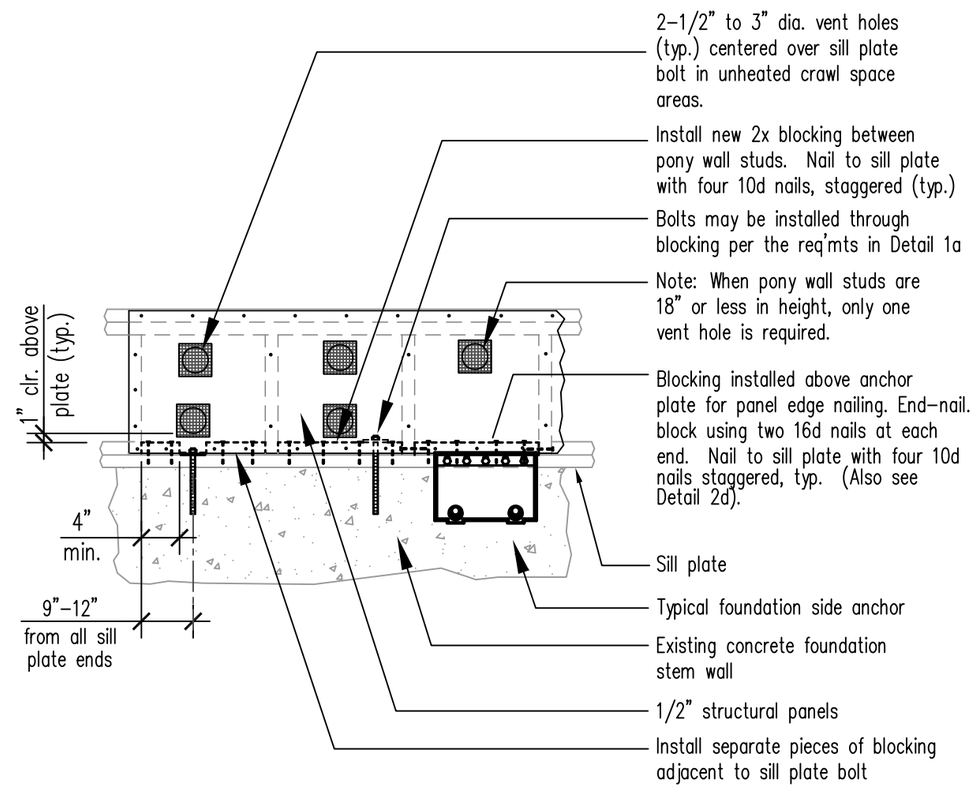

FRONT VIEW

2b SILL PLATE WIDER THAN PONY WALL OR EMBEDDED IN CONCRETE

2 PONY WALL BRACING DETAILS

JANUARY 2008

Standard Earthquake Home Retrofit Plan Set

EARTHQUAKE DAMAGE REDUCTION IN EXISTING WOOD FRAME RESIDENTIAL BUILDINGS WITH WEAK PONY WALLS AND UNBOLTED SILL PLATES

Plan Details Reference Sheet

BUILDING A DISASTER RESISTANT COMMUNITY. PROJECT IMPACT SEATTLE

Sheet

S11

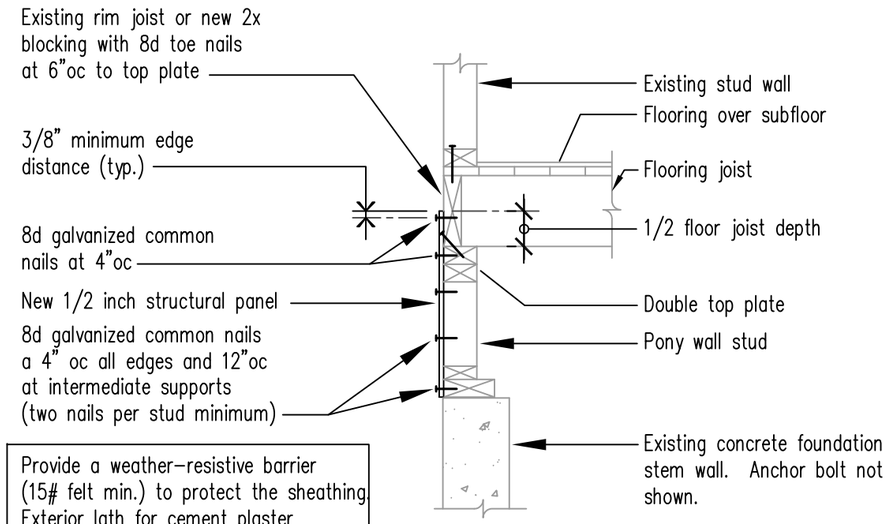

Provide a weather-resistive barrier (15# felt min.) to protect the sheathing. Exterior lath for cement plaster requires two layers of (10 minute min.) grade D paper over the sheathing

SECTION

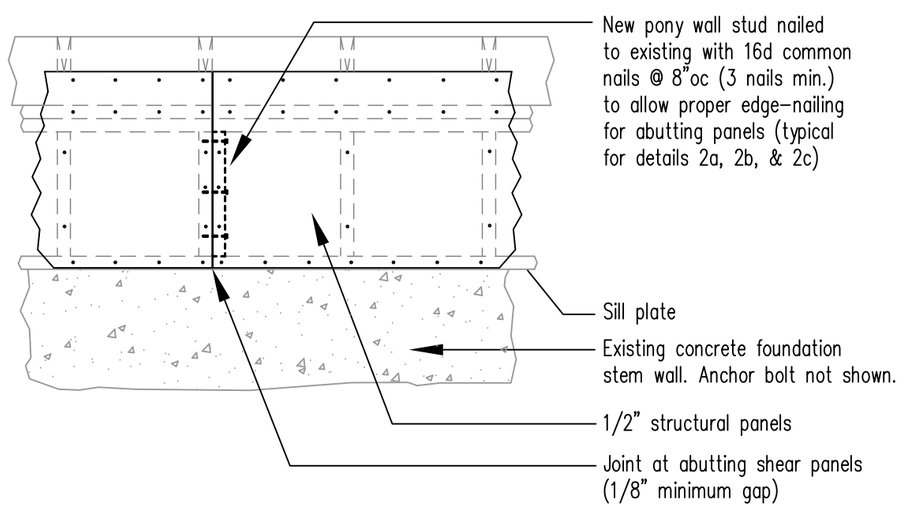

FRONT VIEW

2c STRUCTURAL PANEL INSTALLED ON EXTERIOR FACE OF PONY STUDS

TYPICAL PONY WALL BRACING NOTES:

1. Structural panels shall be 15/32" or 1/2" CDX, Oriented Strand Board (OSB), or Structural II and shall be installed in accordance with the size, spacing, and hardware specifications in Details 2a through 2f and General Notes (Section III, Sheet S5 – S7).

2. Nails: All 8d nails shall be "common" nails with 8d shank diameter equal to .131 inches with full round heads.

3. Leave screens for ventilation holes at anchors unfastened until the anchors are inspected. No vent holes are required in heated areas, such as finished basements, or exterior panel installations.

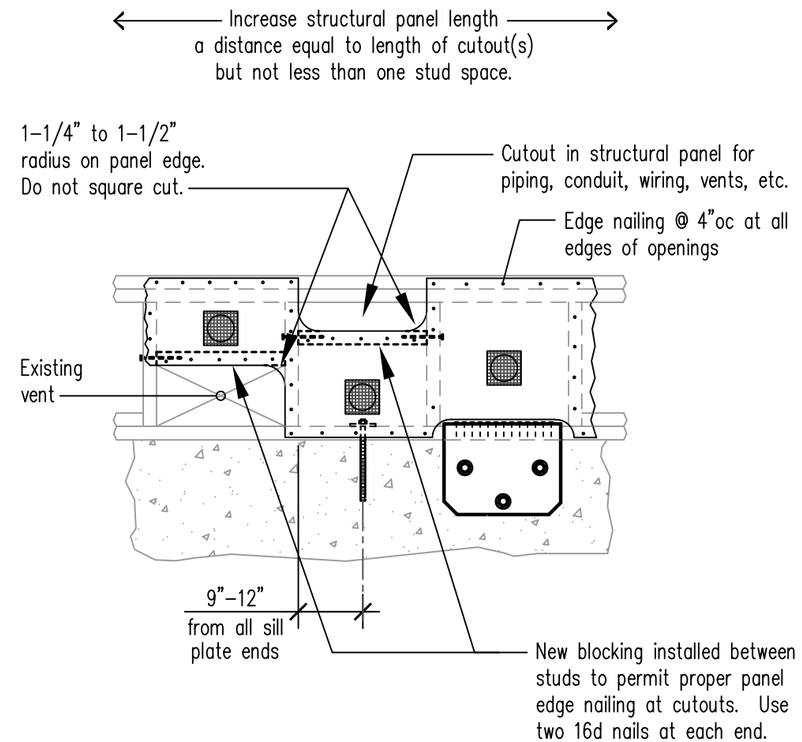

FRONT VIEW

2d PANEL CUTOUTS AND NOTCHING

2 PONY WALL BRACING DETAILS

JANUARY 2008

Standard Earthquake Home Retrofit Plan Set

EARTHQUAKE DAMAGE REDUCTION IN EXISTING WOOD FRAME RESIDENTIAL BUILDINGS WITH WEAK PONY WALLS AND UNBOLTED SILL PLATES

Plan Details Reference Sheet

BUILDING A DISASTER RESISTANT COMMUNITY. PROJECT IMPACT SEATTLE

Sheet

S12

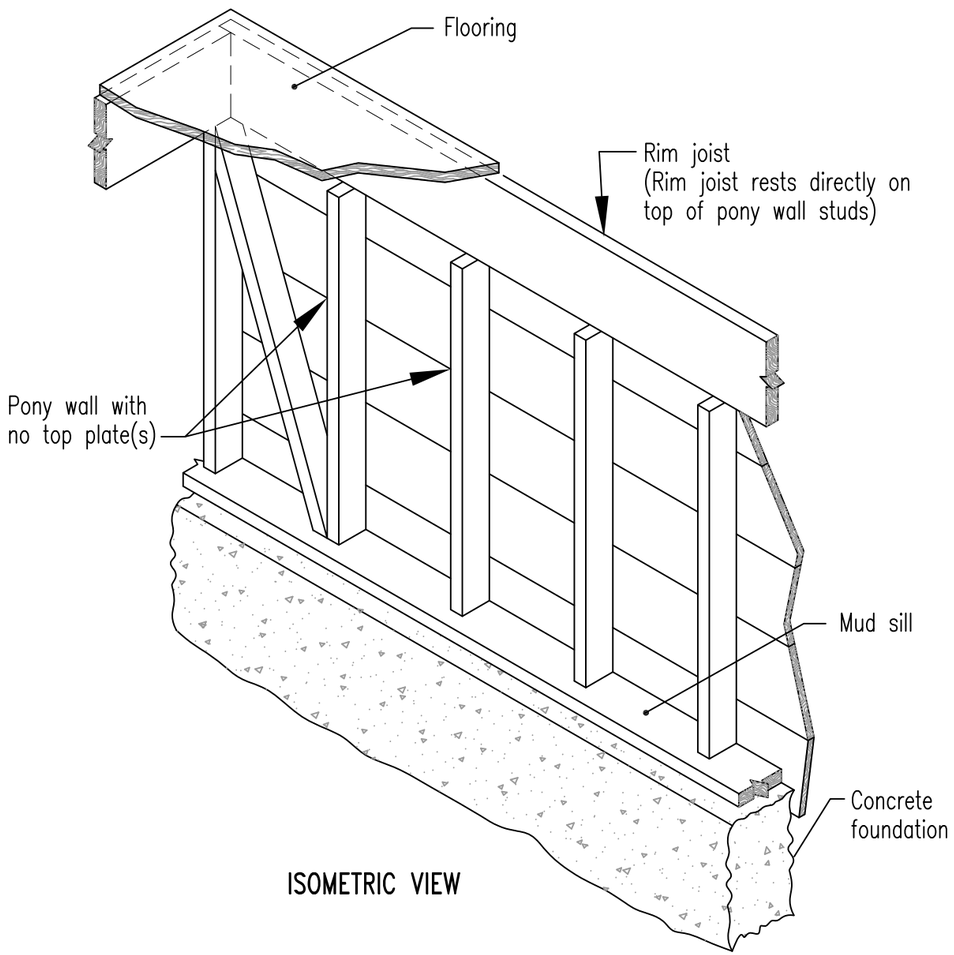

ISOMETRIC VIEW

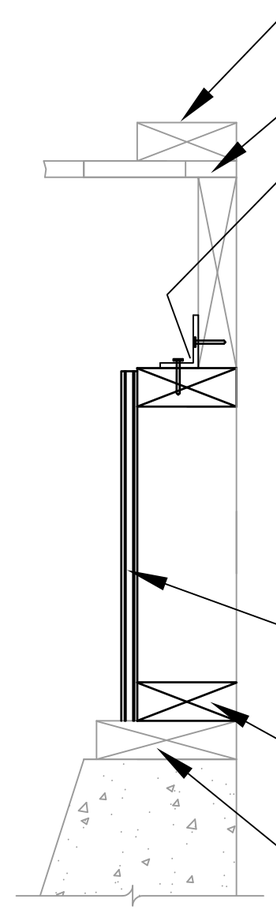

SIDE VIEW

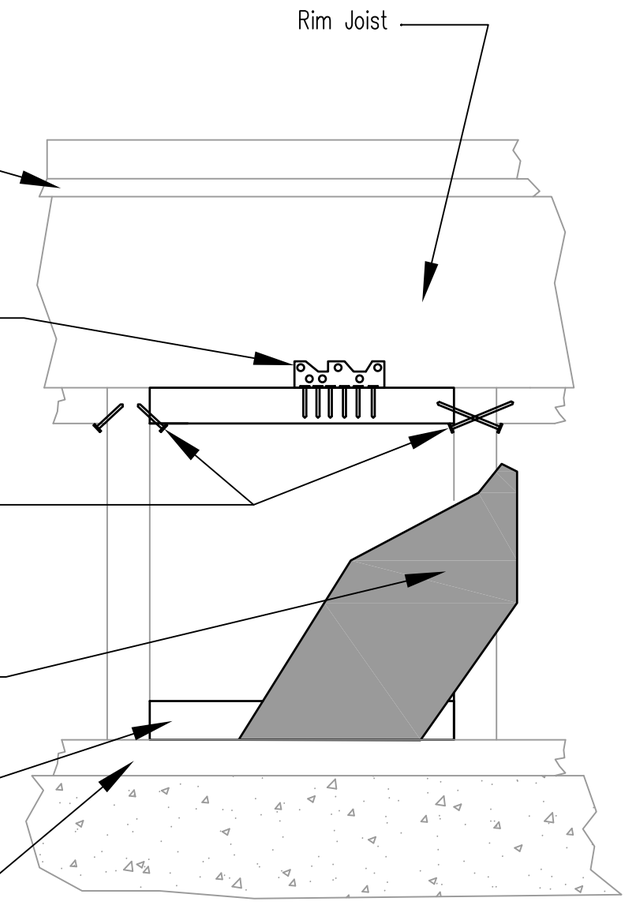

FRONT VIEW

PROBLEM:
No pony wall top plate(s)

SOLUTION:
Framing modifications are necessary to provide the required nailing surfaces for the plywood shear panels and to ensure connections which complete the load path between the pony wall and the floor system.

(2e) PONY WALL BRACING FOR PONY WALLS WITHOUT TOP PLATES

(3) PONY WALL BRACING DETAILS FOR PONY WALLS WITHOUT TOP PLATES

JANUARY 2008

Standard Earthquake Home Retrofit Plan Set

EARTHQUAKE DAMAGE REDUCTION IN EXISTING WOOD FRAME RESIDENTIAL BUILDINGS WITH WEAK PONY WALLS AND UNBOLTED SILL PLATES

Plan Details Reference Sheet

BUILDING A DISASTER RESISTANT COMMUNITY · PROJECT IMPACT SEATTLE

Sheet
S13
13 of 20

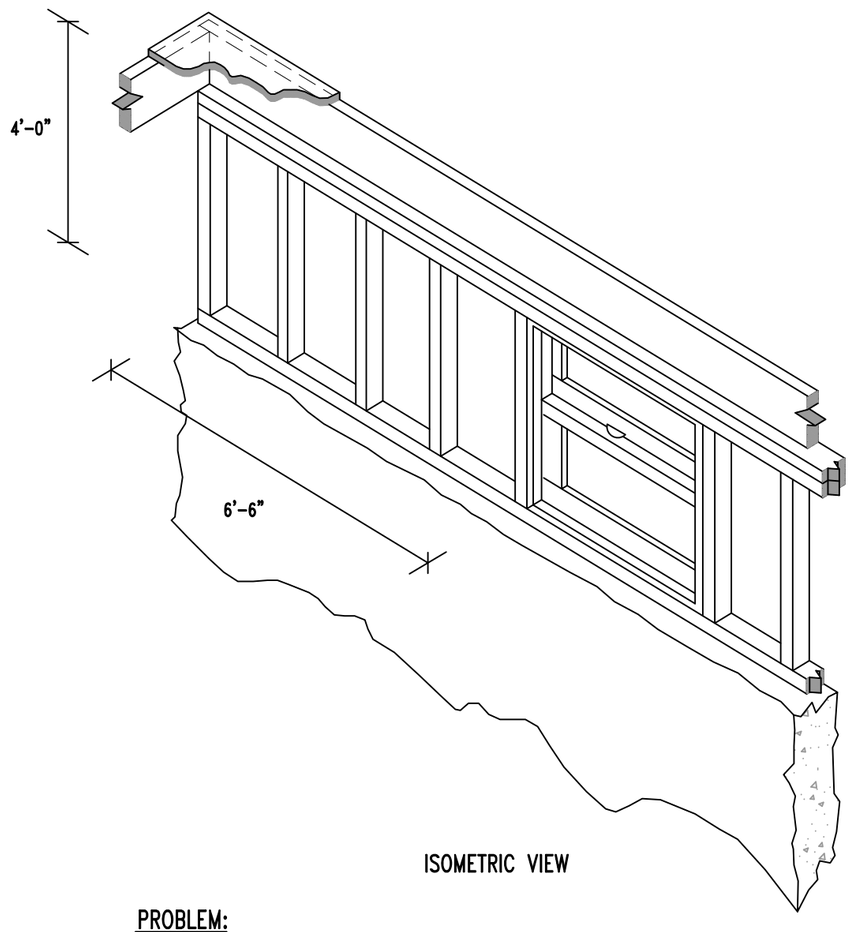

ISOMETRIC VIEW

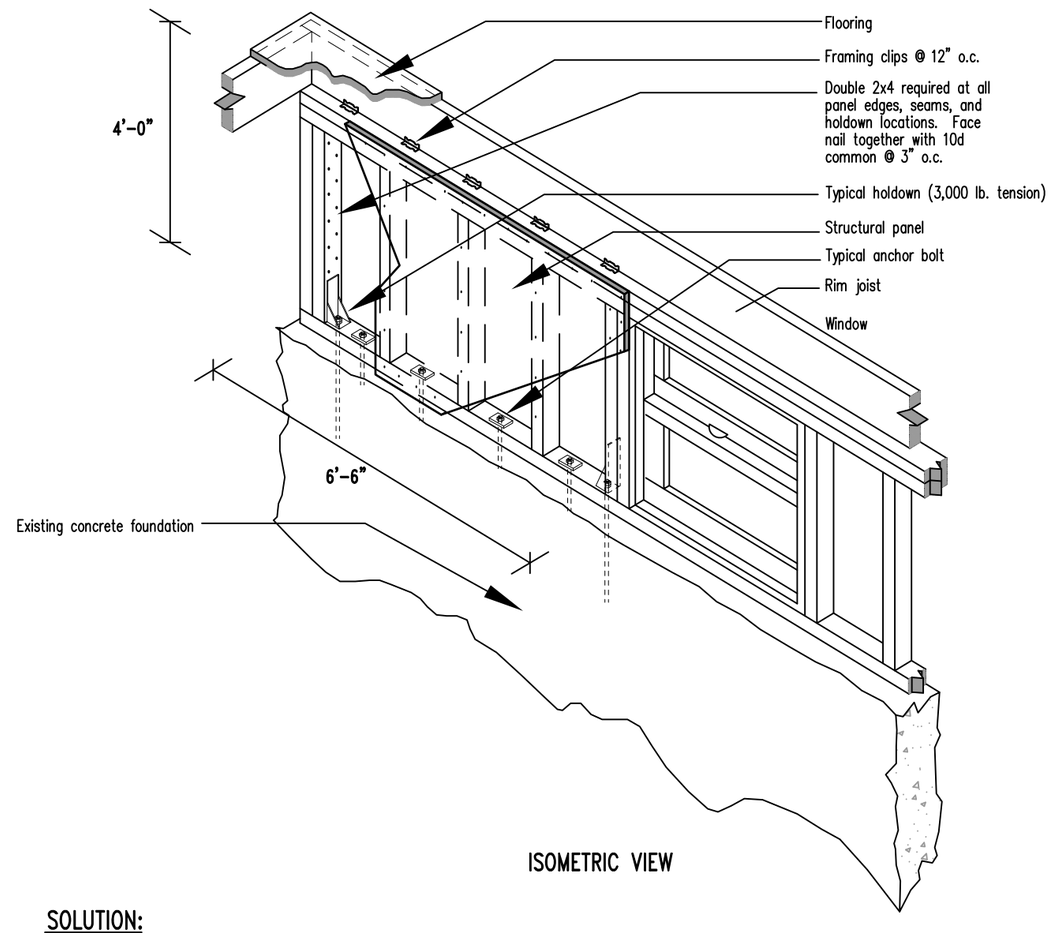

ISOMETRIC VIEW

PROBLEM:

Available pony wall space for structural panel is not long enough to meet the 2:1 aspect ration (length:height), required by the standard plan.

In this case, because a window interrupts the pony wall, only 6'-6" is available for structural panel length. Since this pony wall is 4'-0" high, the minimum panel length needed is 8'-0" (Section III, i.1). Panel lengths less than 2:1 are subject to failure due to overturning forces.

SOLUTION:

Holdown hardware installed at double 2x4 panel edge studs allows structural panels with less than 2:1 aspect ratio to resist overturning forces.
Supplemental Detail 2f explains a prescriptive method for bracing pony wall sections as small as 1:1 and 2'-0" in length or greater. Detail 2f requires framing modifications, and closer spacing for anchor bolts, panel edge nailing, and framing clips. This detail affects all areas of upgrade along a given wall line, however, holdowns are only required in the panel sections less than 2:1.

Following detail 2f, the percentage of pony wall to be braced (Section III, Table 1), per wall, can be reduced in 2 and 3 story conditions as shown:

2- story	55% (heavy roof or stucco walls)	40% (average weight)
3- story	80% (heavy roof or stucco walls)	65% (average weight)

2f PONY WALL BRACING
Holdown hardware. (pg 1 of 2)

3 PONY WALL BRACING DETAILS – HOLDOWN HARDWARE

JANUARY 2008

Standard Earthquake Home Retrofit Plan Set

EARTHQUAKE DAMAGE REDUCTION IN EXISTING WOOD FRAME RESIDENTIAL BUILDINGS WITH WEAK PONY WALLS AND UNBOLTED SILL PLATES

Plan Details Reference Sheet

BUILDING A DISASTER RESISTANT COMMUNITY. PROJECT IMPACT SEATTLE

Sheet
S14
14 of 20

TABLE FOR DETAIL 2f: MINIMUM PRESCRIPTIVE SUMMARY (1)

STORIES ABOVE FOUNDATION WALL (B)	ANCHOR SIZE AND SPACING (E, G)	MINIMUM # ANCHORS FOR SHORT PANEL LENGTH (2) 2' - 0"	3' - 0"	4' - 0"	PONY WALL BRACING (i) TOTAL UPGRADE PER WALL (5)(6)(8) HEAVY TILE ROOF OR STUCCO WALLS	(5)(6) AVERAGE CONDITIONS	EACH PANEL LENGTH LESS THAN 2:1	(3)(4) PANEL EDGE NAILING	(7)(9) FRAMING CLIPS	(9) JOIST BLOCKING
TWO	1/2" at 12" O.C. maximum	2 anchors	2 anchors	3 anchors	Total bracing not less than 55% of wall length Install part of bracing at each end of wall and remainder to be equally spaced between ends	Total bracing not less than 40% of wall length Install part of bracing at each end of wall and remainder to be equally spaced between ends	2 holdowns one at each end	8d common at 3" O.C.	12" O.C. maximum	At all joist spaces
THREE	1/2" at 12" O.C. maximum	2 anchors	2 anchors	3 anchors	Total bracing not less than 80 % of wall length Install part of bracing at each end of wall and remainder to be equally spaced between ends	Total bracing not less than 65% of wall length Install part of bracing at each end of wall and remainder to be equally spaced between ends	2 holdowns one at each end	8d common at 3" O.C.	12" O.C. maximum	At all joist spaces

NOTES:

(1) Letters in table heading refer to Section III, General Notes, Typical.
(2) 1/2" diameter chemical or mechanical anchors with square plate washers 3/16" x 2" x 2" minimum.
(3) Provide 1/2" CDX plywood nailed to studs with 8d common nails @ 3"o.c. edges and 12"o.c. in the field.
(4) (2) 2x4 studs or (1) 4x4 are required at all panel edges, seams, and holdown locations. Double studs to be face nailed together using 10d common nails @ 3"o.c. staggered.
(5) Minimum height / length of a panel is 2' - 0".
(6) Holdown requires double studs as per note #4 and these studs must also receive panel edge nailing. Holdown capacity to resist tension / uplift force needs to meet or exceed 3,000lbs.
Provide 5/8" diameter chemical anchor embed 12" into existing concrete foundation and maintain 1 3/4" edge distance minimum (edge of concrete to edge of bolt). Note that holdowns are only required for panels < 2:1 aspect ratio
(7) Framing clips from rim joist / blocking to the top plate, clips can be closer than 12"o.c. to meet required amount.
(8) Exterior walls with Portland cement plaster or roofs using clay and concrete tile weighing more than 6 psf.
(9) If blocking is used between the joists in place of a continuous Rim Joist, one framing clip must be installed at each block minimum. Clips can be spaced closer to meet spacing requirments over the panel bracing length.

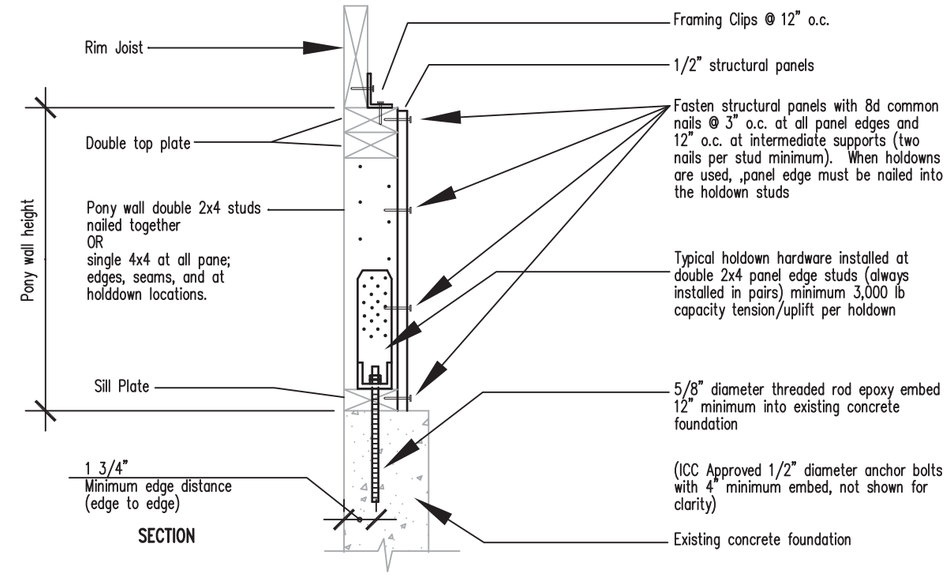

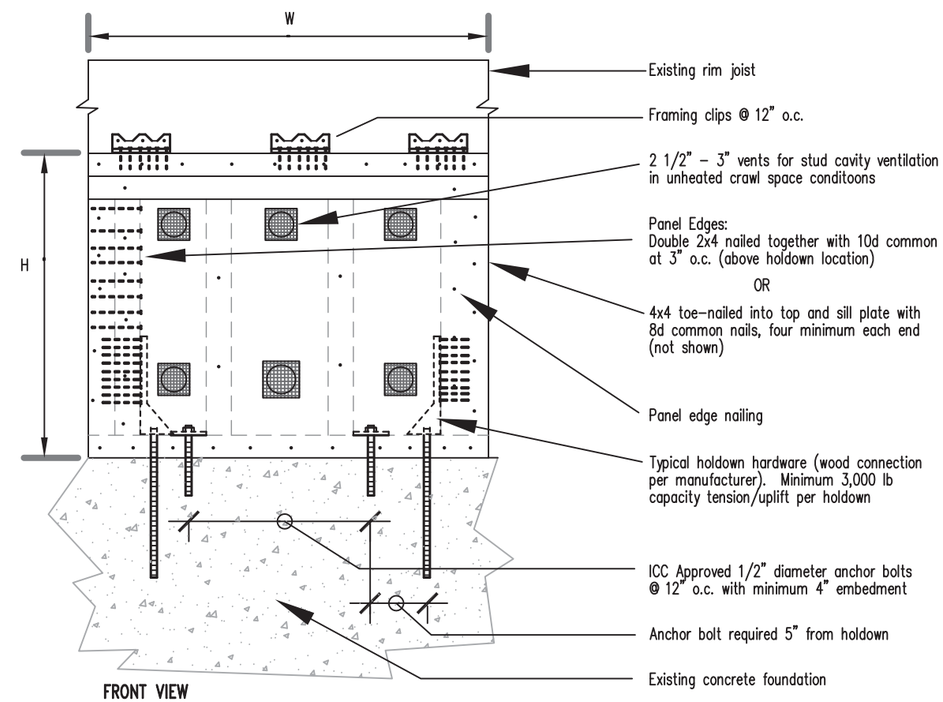

(2f) HOLDOWN HARDWARE (pg 2 of 2) for L/H < 2:1, but not < 1:1

(3) PONY WALL BRACING DETAILS – HOLDOWN HARDWARE

JANUARY 2008

Standard Earthquake Home Retrofit Plan Set

EARTHQUAKE DAMAGE REDUCTION IN EXISTING WOOD FRAME RESIDENTIAL BUILDINGS WITH WEAK PONY WALLS AND UNBOLTED SILL PLATES

Plan Details Reference Sheet

PROJECT IMPACT SEATTLE — BUILDING A DISASTER RESISTANT COMMUNITY

Sheet S15

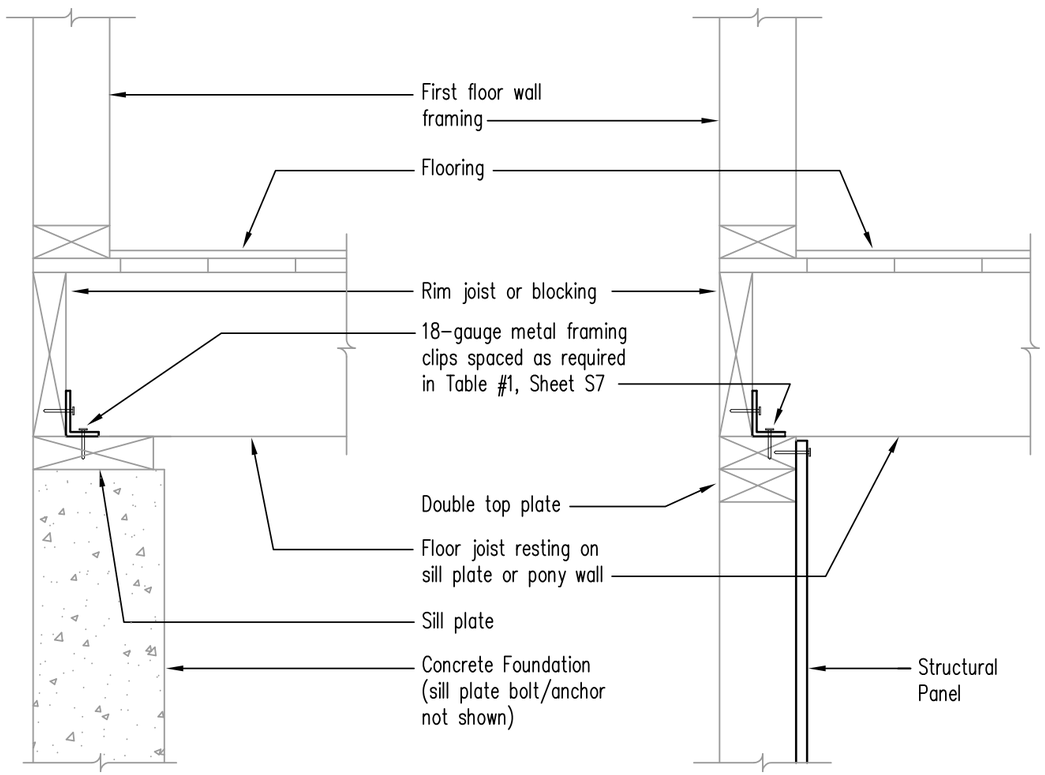

SECTION

SECTION

3a FLOOR JOIST PERPENDICULAR TO SILL PLATE OR PONY WALL

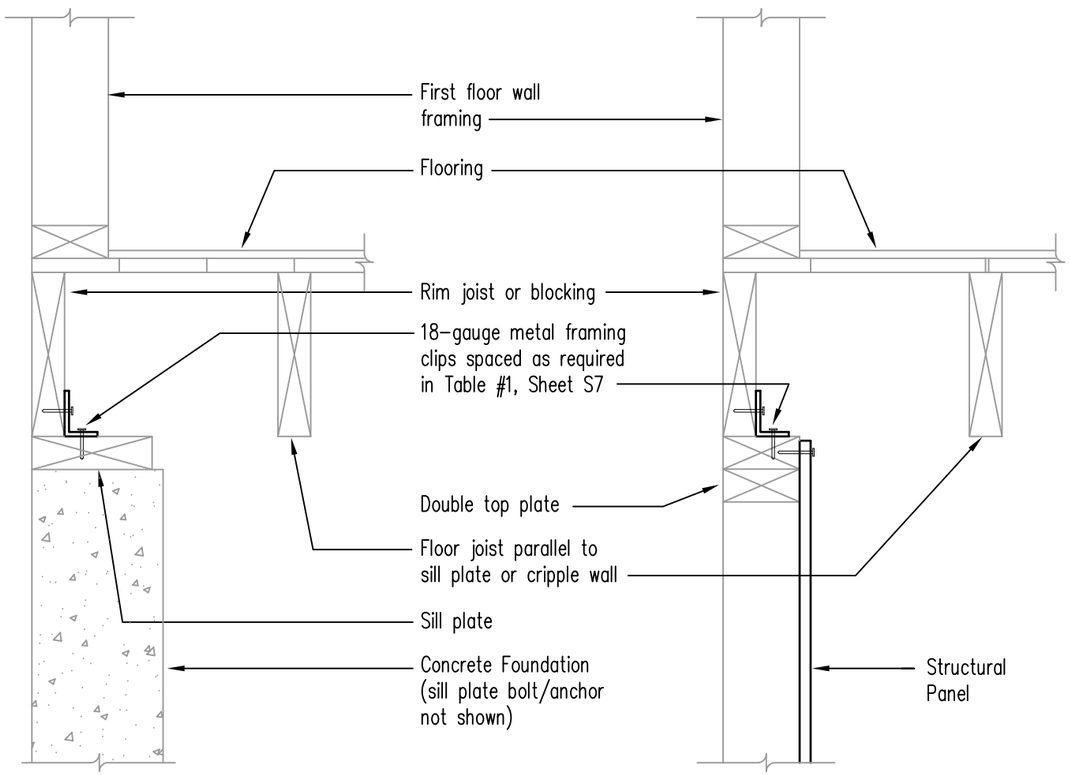

SECTION

SECTION

3b FLOOR JOIST PARALLEL TO SILL PLATE OR PONY WALL

3 FLOOR FRAMING CONNECTION DETAILS

JANUARY 2008

Standard Earthquake Home Retrofit Plan Set

EARTHQUAKE DAMAGE REDUCTION IN EXISTING WOOD FRAME RESIDENTIAL BUILDINGS WITH WEAK PONY WALLS AND UNBOLTED SILL PLATES

Plan Details Reference Sheet

BUILDING A DISASTER RESISTANT COMMUNITY · PROJECT IMPACT SEATTLE

Sheet

S16

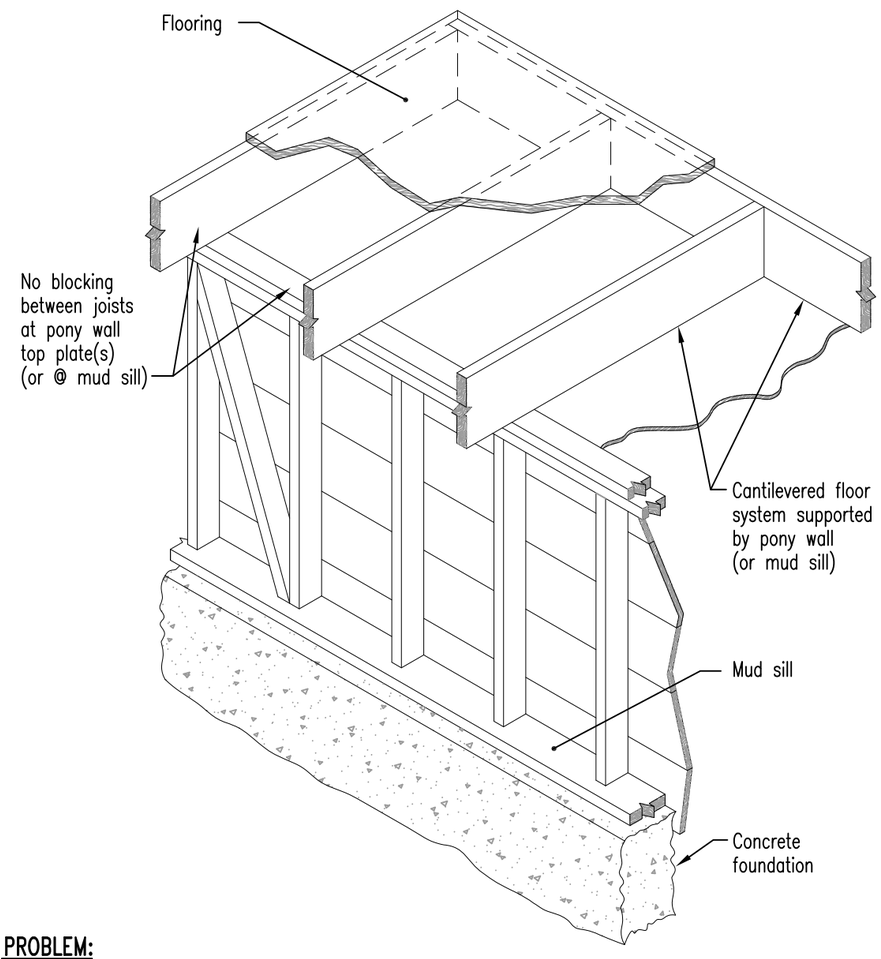

PROBLEM:
Lack of blocking above pony wall at cantilevered floor results in no framing elements on which to install framing clips.

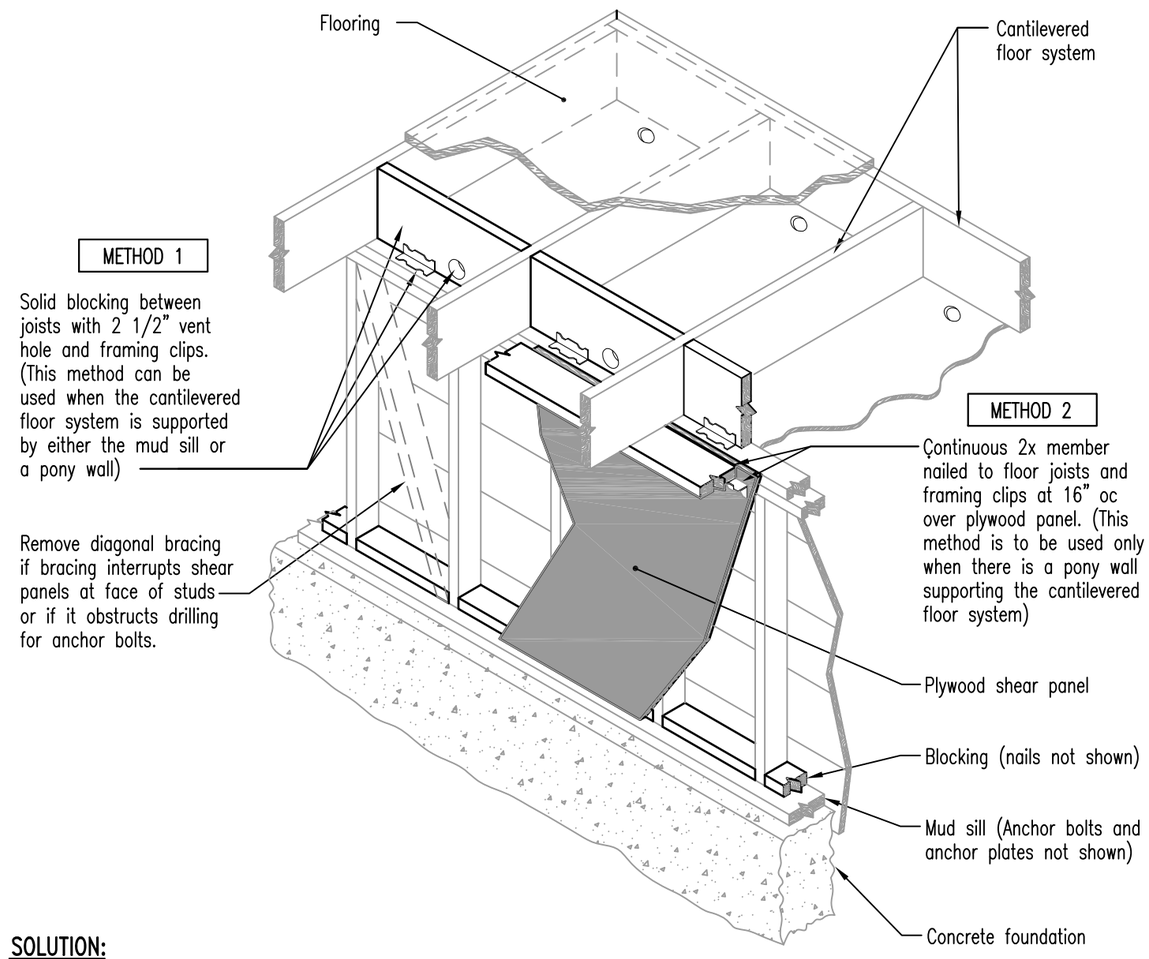

SOLUTION:
Framing modifications are necessary to provide the required nailing surfaces for the framing clips and to ensure connections that complete the load path between the pony wall and the floor system (See details on sheet S-16)

3 FLOOR FRAMING AT CANTILEVERED FLOORS CONNECTION DETAILS

JANUARY 2008

Standard Earthquake Home Retrofit Plan Set

EARTHQUAKE DAMAGE REDUCTION IN EXISTING WOOD FRAME RESIDENTIAL BUILDINGS WITH WEAK PONY WALLS AND UNBOLTED SILL PLATES

Plan Details Reference Sheet

BUILDING A DISASTER RESISTANT COMMUNITY. PROJECT IMPACT SEATTLE

Sheet
S17
17 of 20

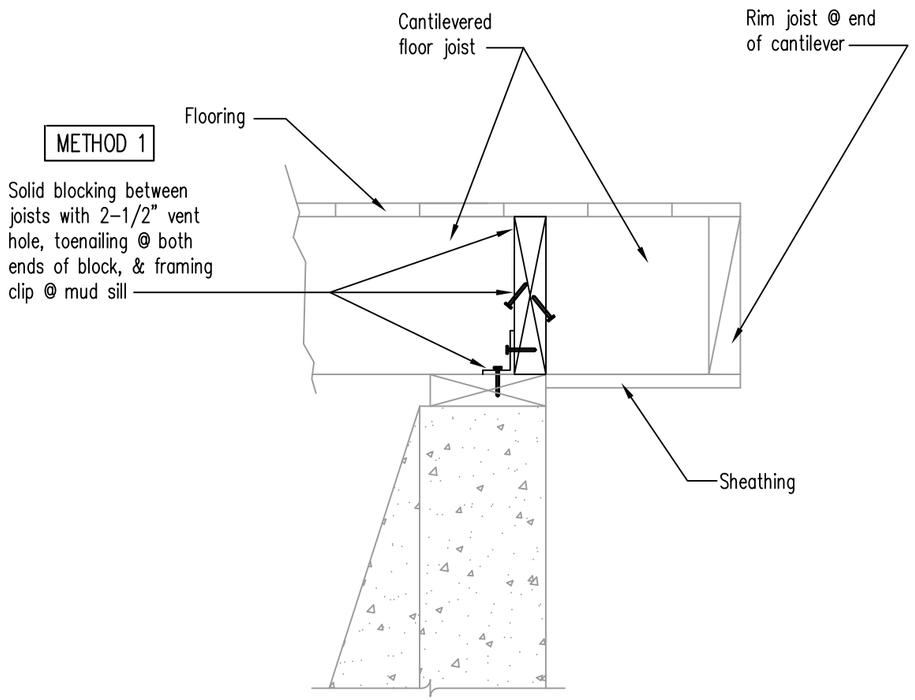

SIDE VIEW

3c CANTILEVER ABOVE SILL PLATE

REPAIR DETAIL FOR CANTILEVERED FLOOR WITH NO BLOCKING ABOVE SILL PLATE
(Install solid blocking between joists – "METHOD 1")

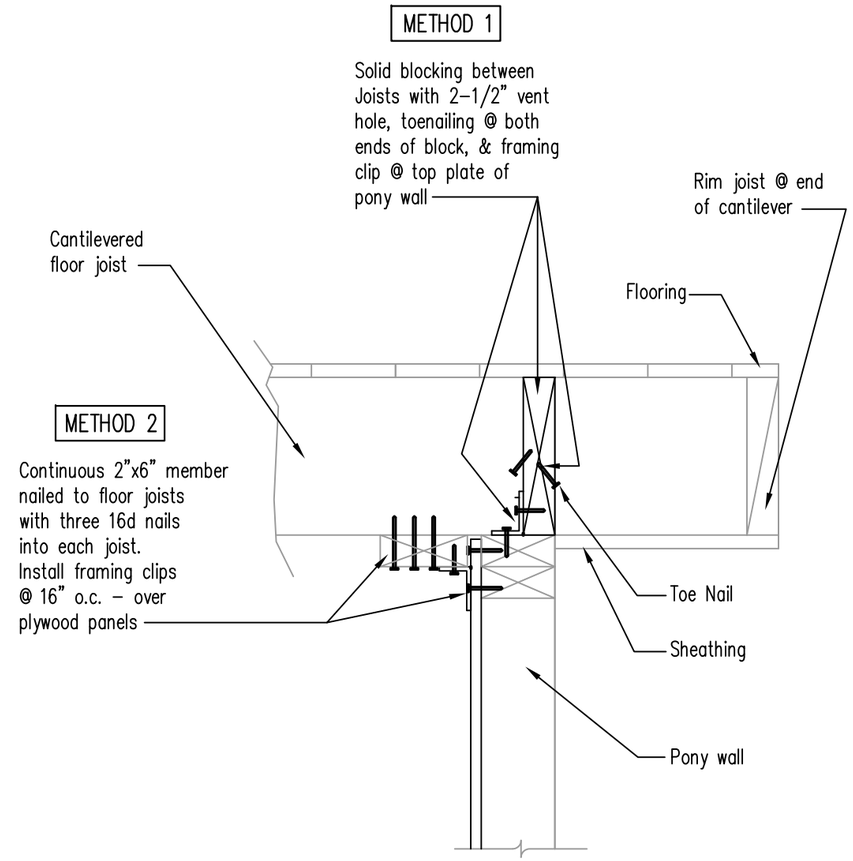

SIDE VIEW

3d CANTILEVER ABOVE PONY WALL

REPAIR DETAIL FOR CANTILEVERED FLOOR WITH NO BLOCKING ABOVE PONY WALL
(Install solid blocking between joists – "METHOD 1"
OR install continuous 2x member – "METHOD 2")

3 FLOOR FRAMING CONNECTION DETAILS AT CANTILEVERED FLOORS

JANUARY 2008

Standard Earthquake Home Retrofit Plan Set

EARTHQUAKE DAMAGE REDUCTION IN EXISTING WOOD FRAME RESIDENTIAL BUILDINGS WITH WEAK PONY WALLS AND UNBOLTED SILL PLATES

Plan Details Reference Sheet

BUILDING A DISASTER RESISTANT COMMUNITY · PROJECT IMPACT SEATTLE

Sheet
S18
18 of 20

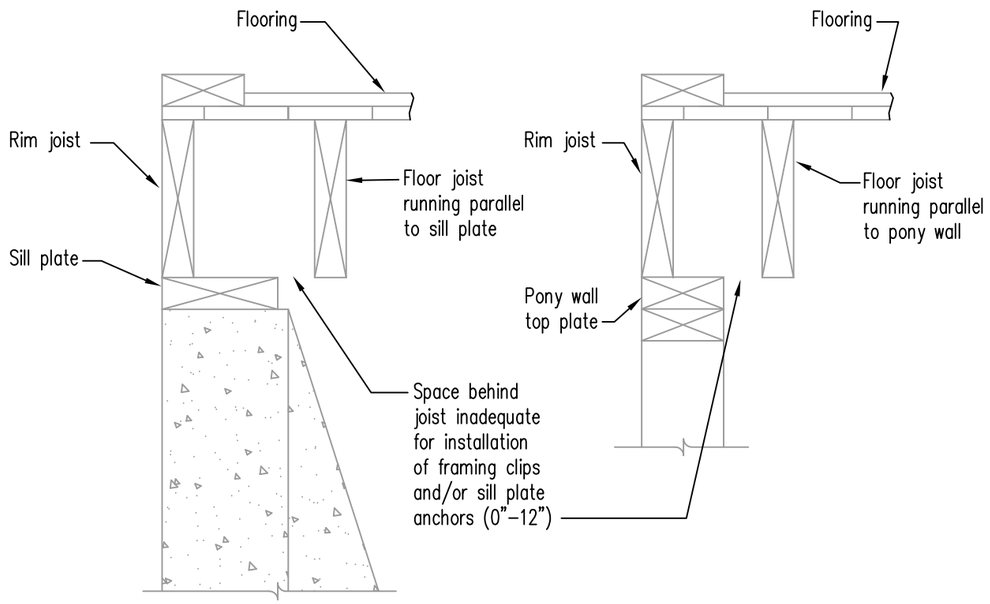

SIDE VIEW
WITH FOUNDATION WALL

SIDE VIEW
WITH PONY WALL

Problem:
Inadequate space between rim joist & floor joist results in no room to install framing clips and/or anchors

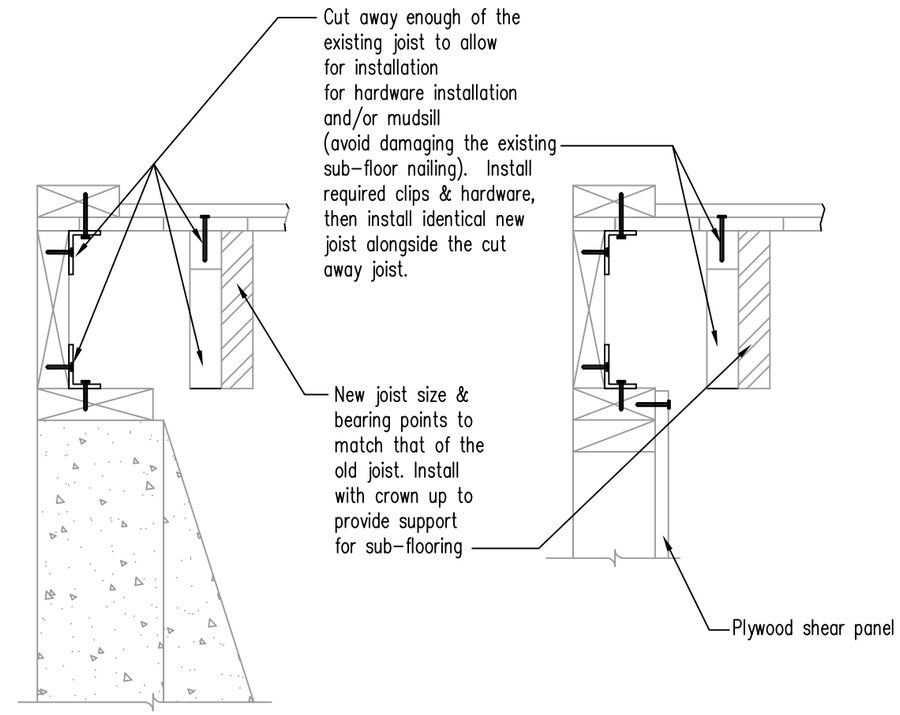

SIDE VIEW
WITH FOUNDATION WALL

SIDE VIEW
WITH PONY WALL

3e INADEQUATE CLEARANCE

Solution:
Framing modifications are necessary to allow access to the rim joist and the mud sill (or the top of the pony wall) to permit the installation of the required framing clips and/or mud sill anchors. **Alternate solutions may be approved on a case by case basis.**

3 FLOOR FRAMING CONNECTION DETAILS

JANUARY 2008

Standard Earthquake Home Retrofit Plan Set

EARTHQUAKE DAMAGE REDUCTION IN EXISTING WOOD FRAME RESIDENTIAL BUILDINGS WITH WEAK PONY WALLS AND UNBOLTED SILL PLATES

Plan Details Reference Sheet

BUILDING A DISASTER RESISTANT COMMUNITY · PROJECT IMPACT SEATTLE

Sheet
S19
19 of 20

NOTE:

This detail only applies to the replacement of a SECTION of foundation wall. Partial perimeter foundations or unreinforced masonry foundations shall be evaluated by an engineer or architect.

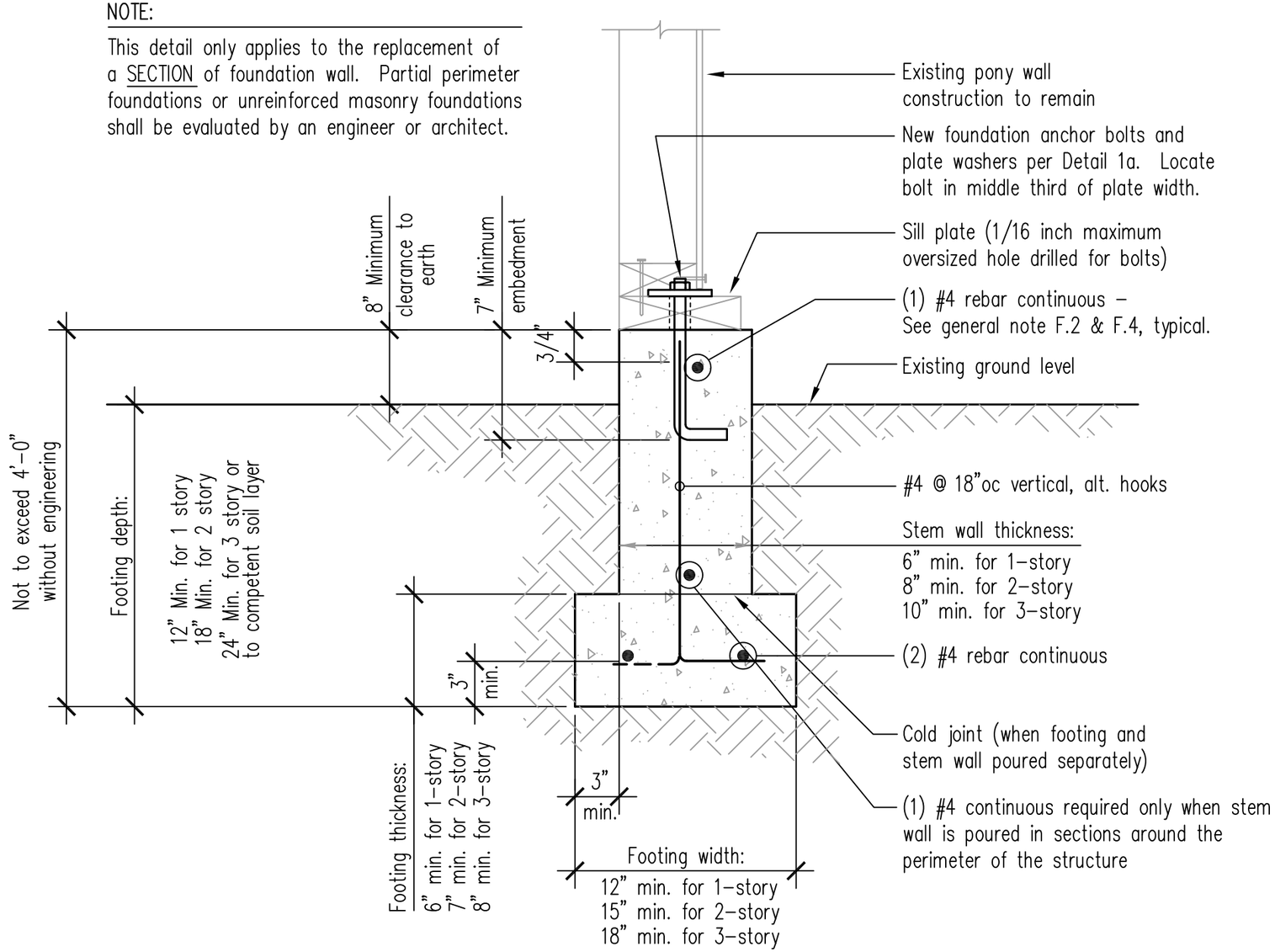

SIDE VIEW

REFERENCE: IBC 2006, FIGURE A3-1

(F) CONCRETE FOUNDATION – SECTION REPLACEMENT

JANUARY 2008

Standard Earthquake Home Retrofit Plan Set

EARTHQUAKE DAMAGE REDUCTION IN EXISTING WOOD FRAME RESIDENTIAL BUILDINGS WITH WEAK PONY WALLS AND UNBOLTED SILL PLATES

Plan Details Reference Sheet

BUILDING A DISASTER RESISTANT COMMUNITY. PROJECT IMPACT SEATTLE

Sheet

S20

20 of 20